GN003 Application Note

Measurement Techniques for High-Speed GaN E-HEMTs

July 2021

Outline

Overview

- The Importance of Measurement Technique

GaN E-HEMTs Switching Test Measurement Techniques

- Short loops matter
- Low-side voltage probing
- High-side floating voltage probing
- Current sensing for high-speed GaN E-HEMTs

Double Pulse Switching Test

- Double Pulse Switch Test Set up
- 400V/30A hard switching turn-on and turn-off test results

Switching Energy Eon/Eoff Measurement

- V_{GS}, V_{DS}, I_{DS} probing techniques to increase measurement accuracy
- Switching loss distribution of GaN E-HEMTs
- Eqoss measurement example
- 400V/30A Eon/Eoff Test results

Summary and Conclusions

Appendix: Bandwidth Requirements

Outline

Overview

- The Importance of Measurement Technique

GaN E-HEMTs Switching Test Measurement Techniques

- Short loops matter
- Low-side voltage probing
- High-side floating voltage probing
- Current sensing for high-speed GaN E-HEMTs

Double Pulse Switching Test

- Double Pulse Switch Test Set up
- 400V/30A hard switching turn-on and turn-off test results

Switching Energy Eon/Eoff Measurement

- V_{GS}, V_{DS}, I_{DS} probing techniques to increase measurement accuracy
- Switching loss distribution of GaN E-HEMTs
- Eqoss measurement example
- 400V/30A Eon/Eoff Test results

Summary and Conclusions

Appendix: Bandwidth Requirements

Overview - Application Note GN003

GaN E-HEMTs have a significantly faster switching speed than Si and SiC MOSFETs. This application note provides details on how to accurately characterize the performance of high speed GaN E-HEMTs so that designers can release optimized designs.

An overview of proper current and voltage measurement techniques is presented for obtaining test results that accurately reflect the performance of GaN devices.

The Double Pulse Switching Test is presented, along with an example of test results. This test is used to characterize hard switching turn-on and turn-off.

An overview of Eon/Eoff measurement is presented along with test results. This test is used to characterize the switching loss distribution.

The Importance of Measurement Technique

GaN Systems' E-HEMTs have **very low parasitic components.** GaN switches with very short delay, very fast, at very high frequencies, and operates at higher efficiencies than equivalent Si and SiC transistors.

Without proper care, the parasitic elements introduced by test equipment and measurement techniques can overshadow the GaN device parameters and lead to erroneous measurement results.

DEVICE SYMBOLS

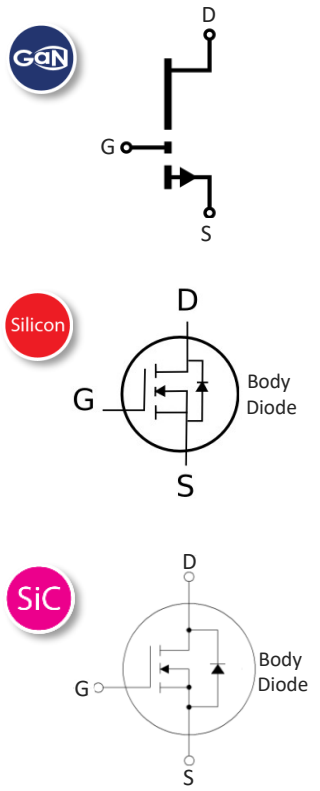

REAL MODEL

Including intrinsic and external parasitic components

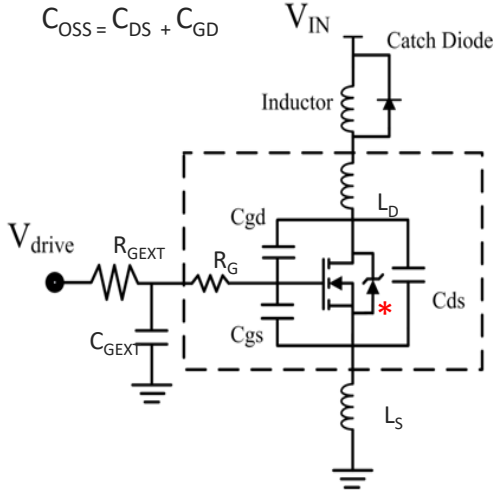

* No body diode in GaN E-HEMT

Key device parameters that affect switching performance

Parameter	Impact	GaN 650V/30A/50mΩ GS66508B	Silicon 650V/33A/65mΩ IPB65R065C7	SiC 900V/35A/65mΩ C3M0065090J
Qg (nC)	Switching speed & Switching frequency	**5.8**	64	30
Coss (pF)		**64**	48	60
tdelay(on) / tdelay(off) (ns)		**4.1 / 8.0**	7 / 72	9 / 16
t_rise / t_fall (ns)		**3.7 / 5.2**	14 / 7	10 / 6
Eon / Eoff (µJ)	Efficiency	**47.5 / 8** (Vds 400V/Ids 15A)	Not listed	39 / 17 (Vds 400V/Ids 20A)
Eoss (µJ)		**8**	8	16
Qrr (µC)		**0**	10	131
trr (ns)		**0**	800	16

Short Loops Matter – Proper Probing Technique

GaN*PX*®, DESIGNED WITH SHORT LOOPS → AVOID INTRODUCING LONG LOOPS AT TEST

GaNPX® packaging is carefully designed with **ultra-low source inductance** to fully exploit the high switching speed capability of GaN E-HEMTs. GaNPX® packaging enables fast, clean, high frequency switching with minimal ringing and EMI.

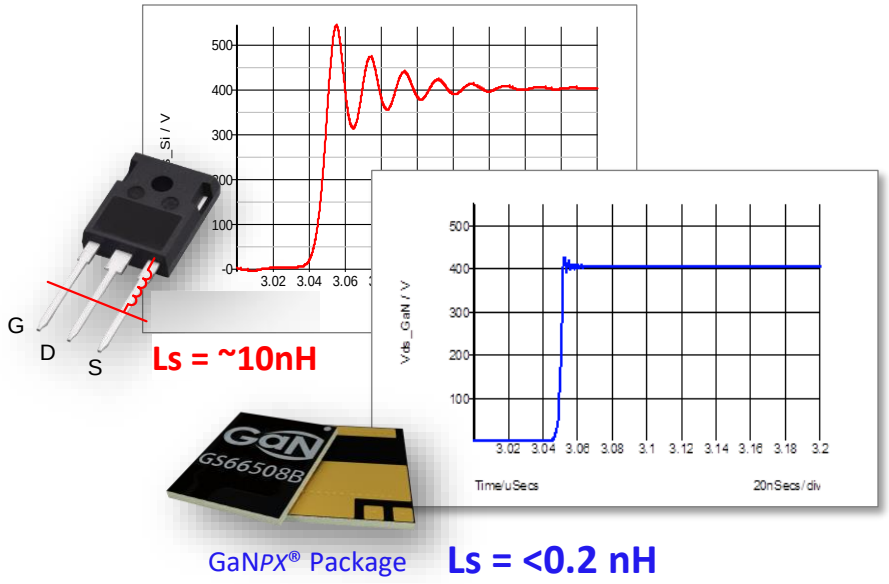

A long ground wire introduces unwanted inductance into the probe measurement path. This results in overshoot and ringing associated with the rising and falling edges of the signals.

Minimizing the length of the ground loop is especially important for GaN E-HEMTs which have very fast rise/fall times that are affected by the probe's ground inductance.

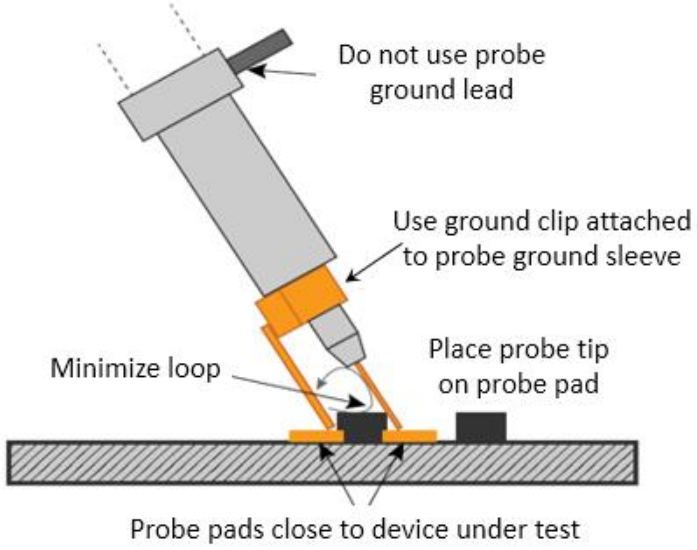

For accurate measurement results, use a scope probe with a short ground clip.

Low Side Voltage Measurement Technique

Low side voltages

- Use a passive high bandwidth probe (recommended 300 MHz B/W or better)
- The ground lead must be short
- PCB test points: Use 2 Plated Through Hole (PTH) points for probe insertion or solder two wires and make a short loop.

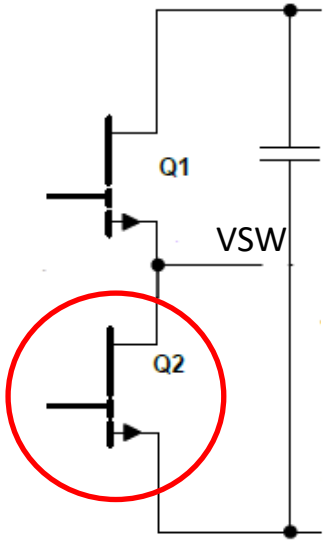

Low side DUT

Low side V_{GS}/V_{DS} measurement on the GS66508B evaluation board

Probe for V_{GS} low side

High Side Voltage Measurement Technique

High side floating signals

HV differential probes

- Important specifications: Bandwidth, CMRR, input impedance.
  Example: PMK bumblebee HV probe:
  400 MHz, 875 ps rise/fall, 4 pF input

Using an isolated transformer to float the oscilloscope ground is **NOT RECOMMENDED** for GaN E-HEMT voltage measurements with a high dV/dt.

- Line frequency isolated transformer is not completely isolated for high dV/dt signal due to capacitive coupling.
- Potential ground loop and common mode noise.

Considerations when using the oscilloscope's MATH function to calculate Eon and Eoff. ($E = I_d * V_{DS}$)

- Standard high Bandwidth passive probes can be used
- The accuracy is usually poor.

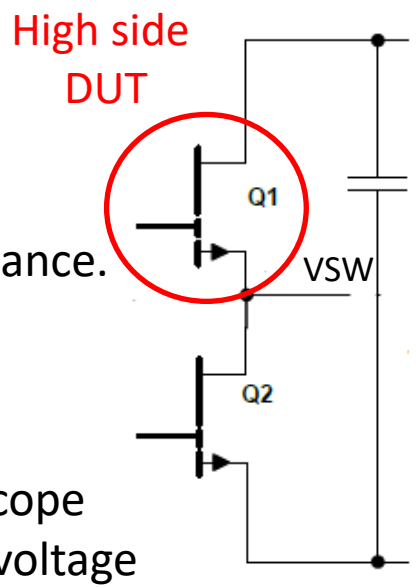

High-side V_{GS}/V_{DS} measurement on the GS66508B evaluation board

HV probe for switching node

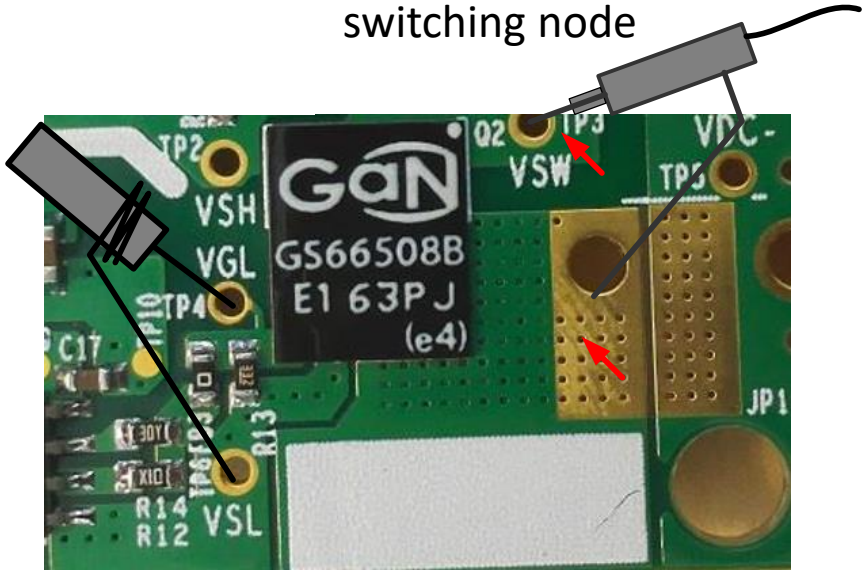

Types of Current Sense Devices for High Speed GaN

	Current shunt resistor	Current transformer	Rogoski coil current probe
Pros	• Best accuracy • High bandwidth	• Isolated output	• Minimum insertion inductance • Isolated output • Smallest size
Cons	• Large size • Added loop inductance	• Large size • Added loop inductance • Lower bandwidth	• Low bandwidth • Not suitable for switching energy measurement
Best Use	• Eon/Eoff measurement	• Application where high bandwidth is not required	• High current measurement. e.g. Double pulse test
Equipment	**T&M research co-axial current shunt** • SDN-414-10 (0.1Ω, 2GHz bandwidth) • SSDN series for low insertion inductance 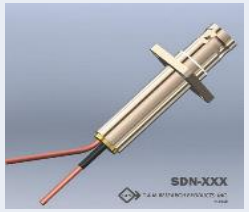 SDN series 	**Pearson 2877 current monitor** • 1V/A output • 200MHz/100A 	**PEM CWT Ultra Mini** • 9.2Hz-30MHz, 300A  

Outline

Overview

- The Importance of Measurement Technique

GaN E-HEMTs Switching Test Measurement Techniques

- Short loops matter
- Low-side voltage probing
- High-side floating voltage probing
- Current sensing for high-speed GaN E-HEMTs

Double Pulse Switching Test

- Double Pulse Switch Test Set up
- 400V/30A hard switching turn-on and turn-off test results

Switching Energy Eon/Eoff Measurement

- V_{GS}, V_{DS}, I_{DS} probing techniques to increase measurement accuracy
- Switching loss distribution of GaN E-HEMTs
- Eqoss measurement example
- 400V/30A Eon/Eoff Test results

Summary and Conclusions

Appendix: Bandwidth Requirements

Double Pulse Switching Test Waveform Example

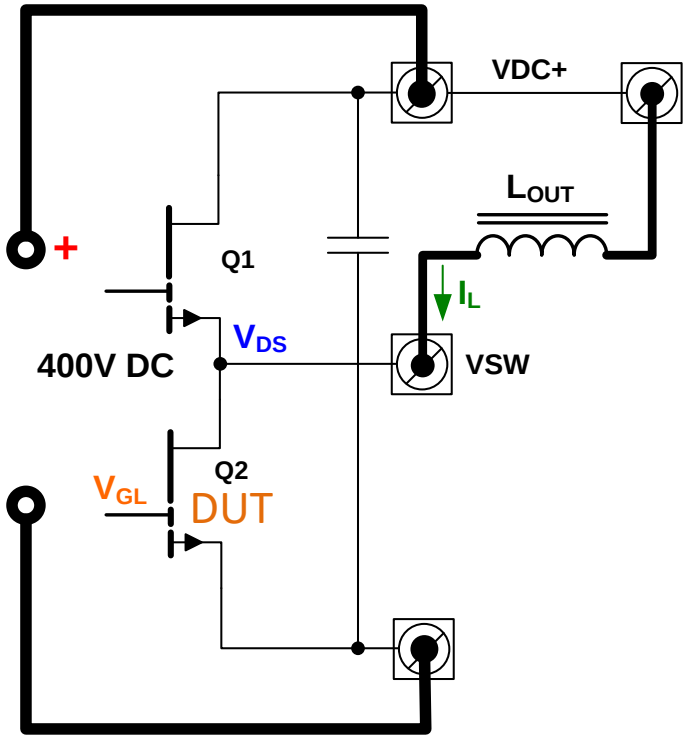

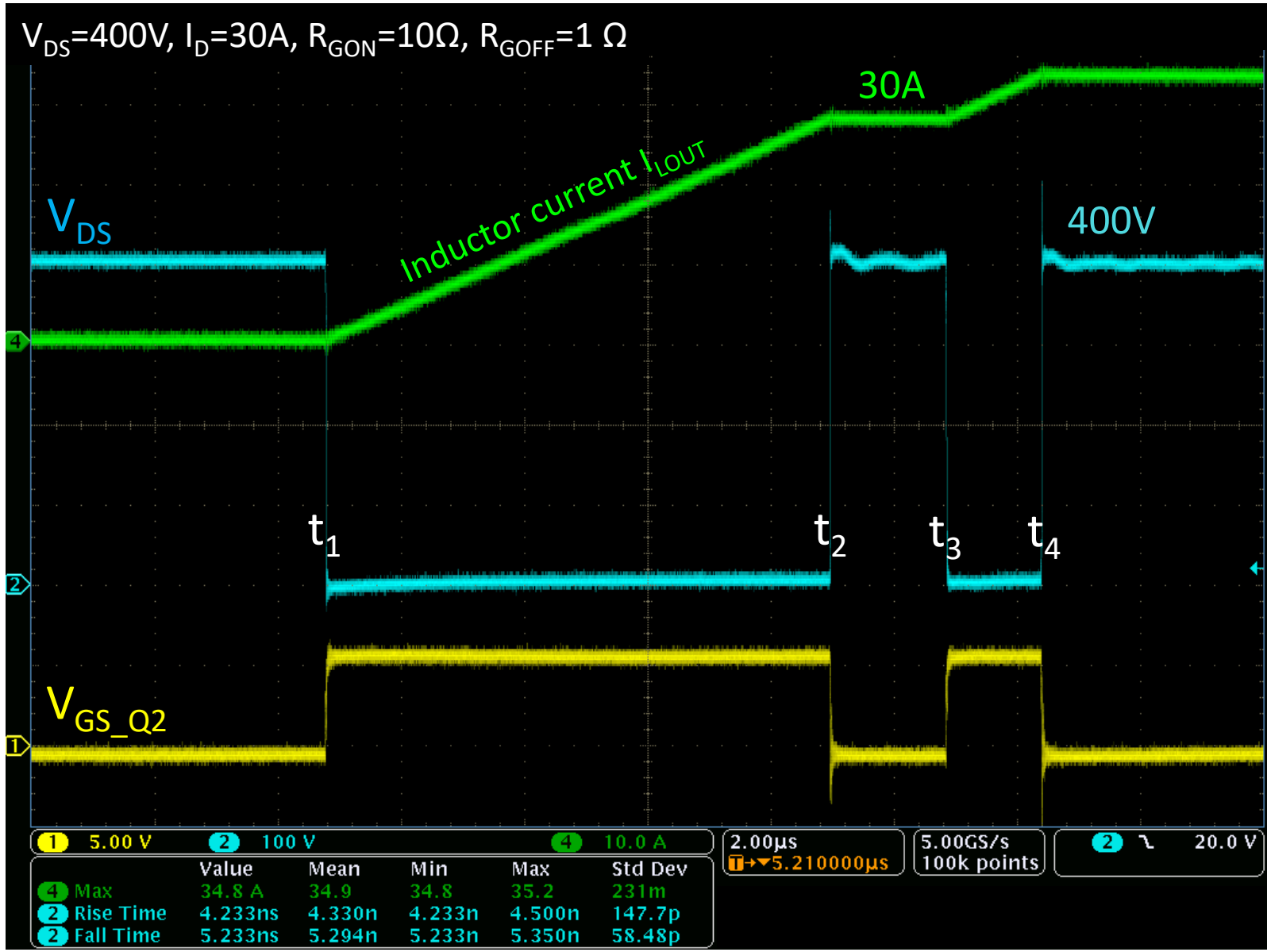

t_1: Device Under Test (DUT) turned on. Inductor charged to desired current (30A in this example)

t_2: DUT turned off. Inductor current freewheels in Q1. DUT turn-off → Measure dV/dt, t_{rise}

t_3: DUT turn-on → Measure, dV/dt, t_{fall}

t_4: DUT turned off

GS66508* Double Pulse Switching Test

V_{DS}=400V, I_D=30A Hard Switching Turn-on

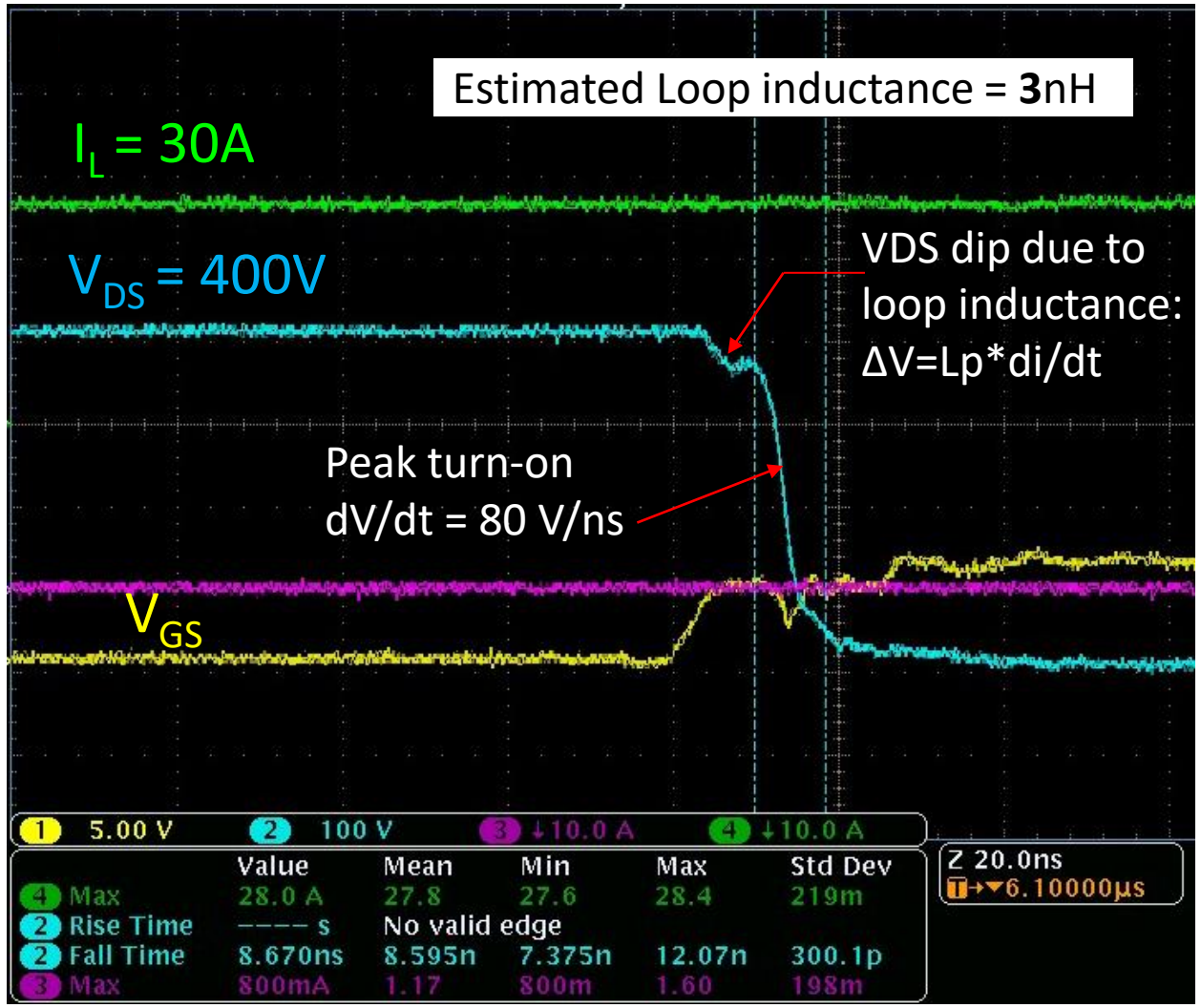

V_{DS}=400V, I_D=30A Hard Switching Turn-off

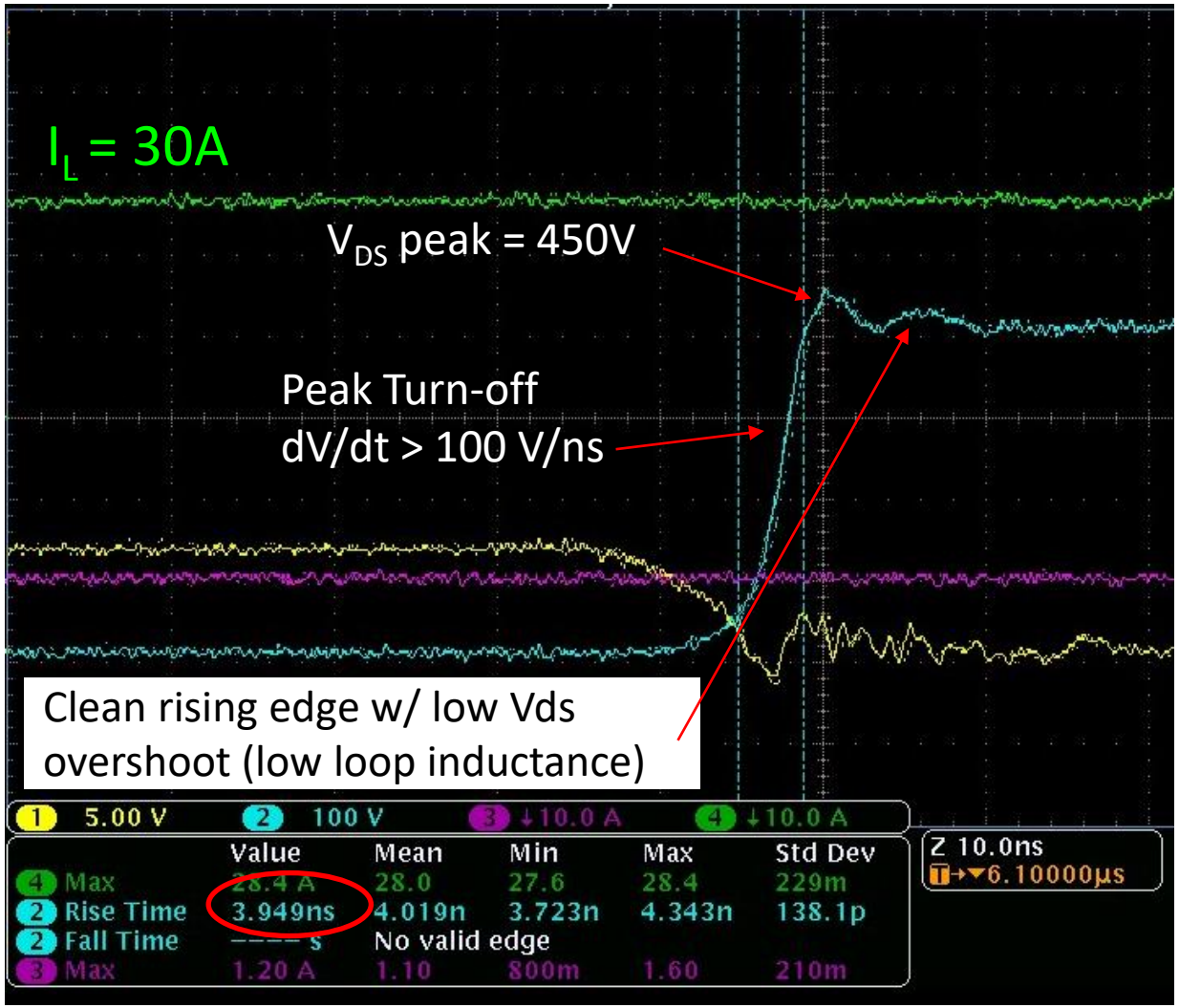

* GS66508 – 650V / 30A / 50mΩ

Hard Switching Performance Comparison: GaN vs SiC

Using the measurement techniques described in this document, the clean switching edges and fast switching speeds of GaN Systems' E-HEMT were accurately captured. This results in a true comparison of GaN to SiC.

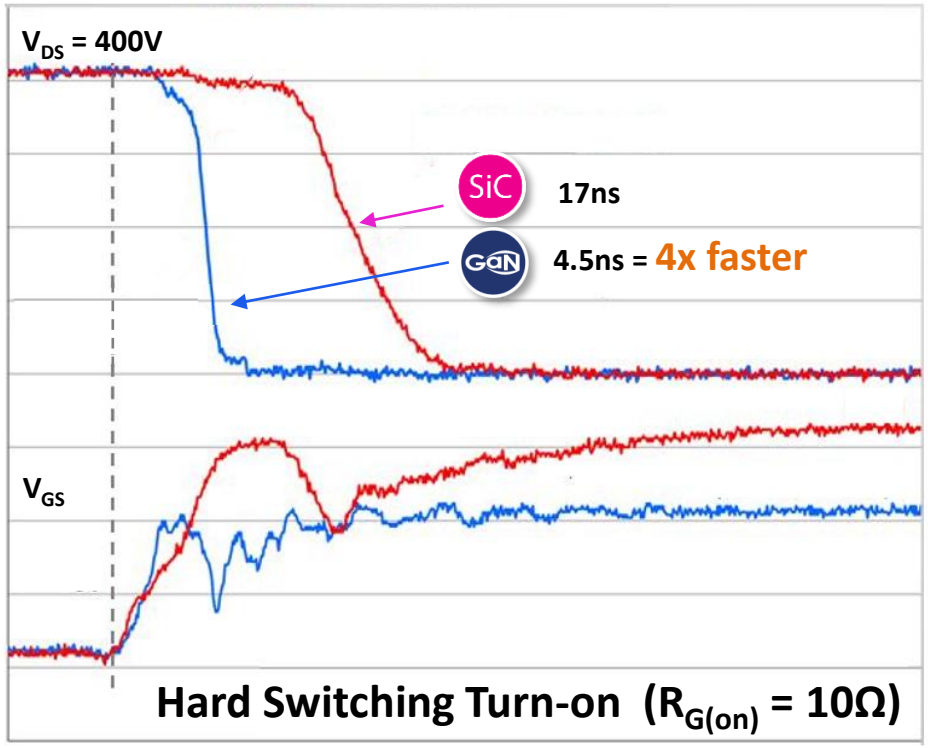

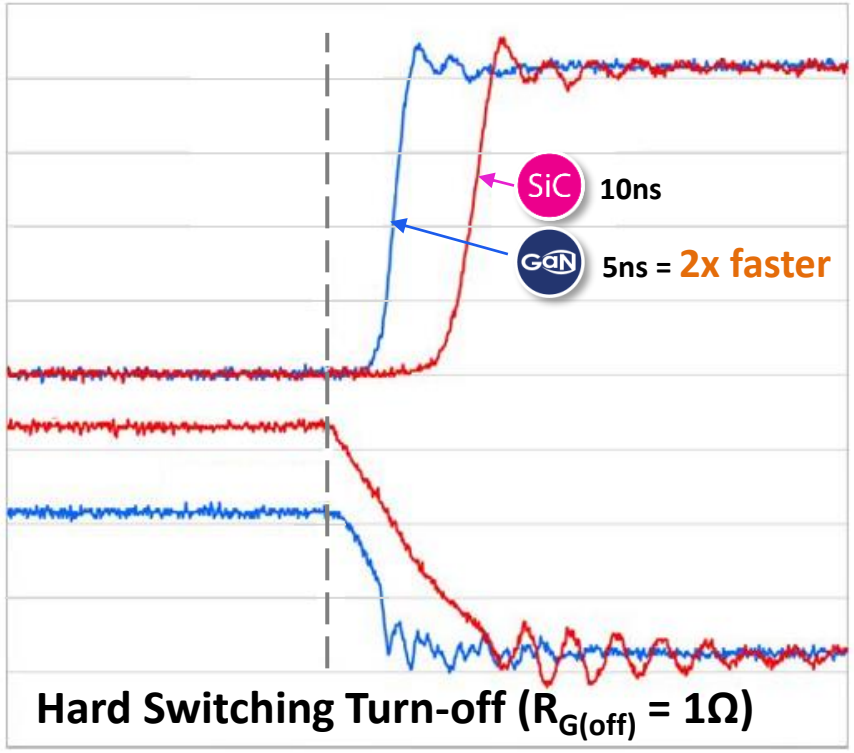

Test: 400V/15A Half Bridge hard switching double pulse test

- Gate Drive: Silab Si8271. $R_{G(on)}$ = 10Ω, RG(off) = 1Ω
- GaN device: 650V / 30A / 50mΩ
- SiC device: 900V / 35A / 65mΩ

Outline

Overview

- The Importance of Measurement Technique

GaN E-HEMTs Switching Test Measurement Techniques

- Short loops matter
- Low-side voltage probing
- High-side floating voltage probing
- Current sensing for high-speed GaN E-HEMTs

Double Pulse Switching Test

- Double Pulse Switch Test Set up
- 400V/30A hard switching turn-on and turn-off test results

Switching Energy Eon/Eoff Measurement

- V_{GS}, V_{DS}, I_{DS} probing techniques to increase measurement accuracy
- Switching loss distribution of GaN E-HEMTs
- Eqoss measurement example
- 400V/30A Eon/Eoff Test results

Summary and Conclusions

Appendix: Bandwidth Requirements

Eon/Eoff Measurement Techniques

- GaN Systems' daughterboard EVBs are commonly used to characterize the GaN E-HEMT switching losses.
- A current shunt is the best choice for conducting the Eon/Eoff measurements
- The EVBs' test points are designed for use with the T&M Research SDN-414 high B/W coaxial current shunt

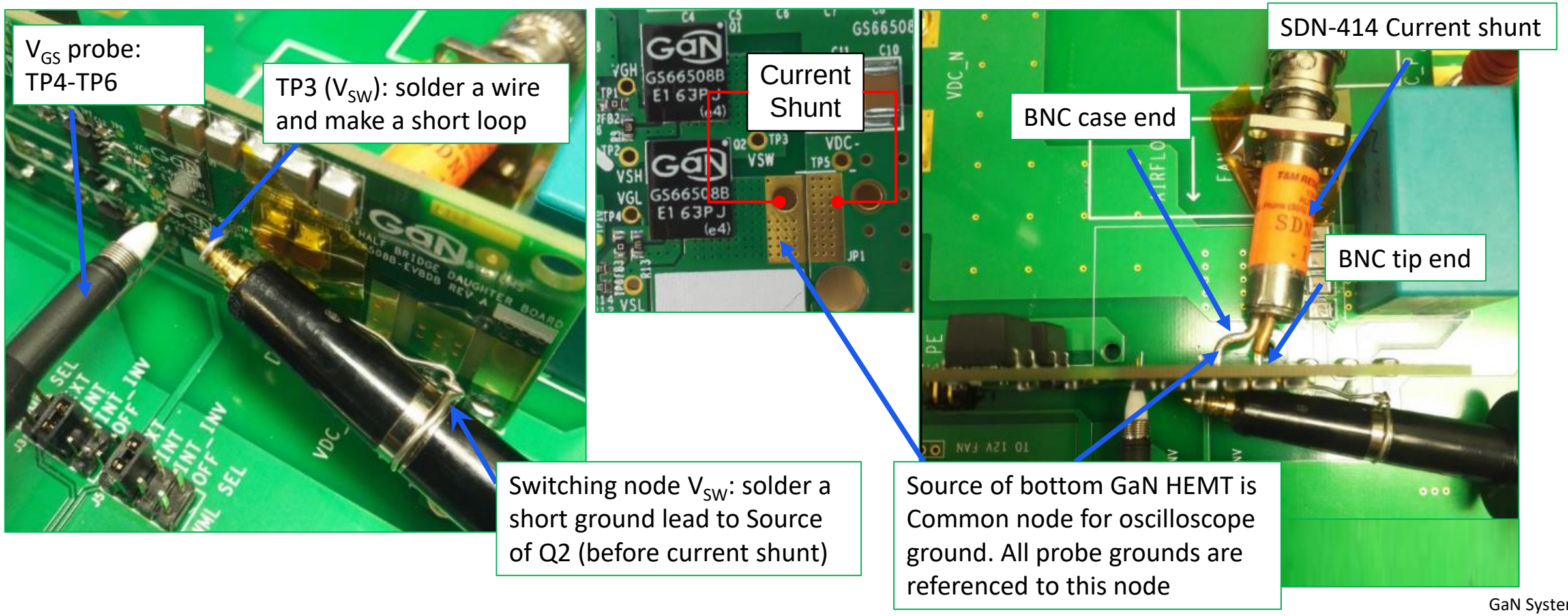

Eon/Eoff Switching Loss Distribution of GaN E-HEMTs

During the voltage commutation period, the E_{on}/E_{off} that occurs intrinsically within the device differs slightly from what is captured through measurement.

Loss distribution	External measurement	Intrinsic to device
E_{on} - Turn on loss	$E_{VIon} + E_{qoss}$	$E_{VIon} + E_{qoss} + E_{oss}$
E_{off} - Turn off loss	$E_{VIoff} + E_{oss}$	E_{VIoff}

- E_{qoss} and E_{oss} loss affect the overall E_{on} loss, especially under light load operating condition.
- Accurate E_{qoss} and E_{oss} loss calculations are necessary and are fully explained in [Parasitic Capacitance Eqoss Loss Mechanism, Calculation, and Measurement in Hard-Switching for GaN HEMTs]

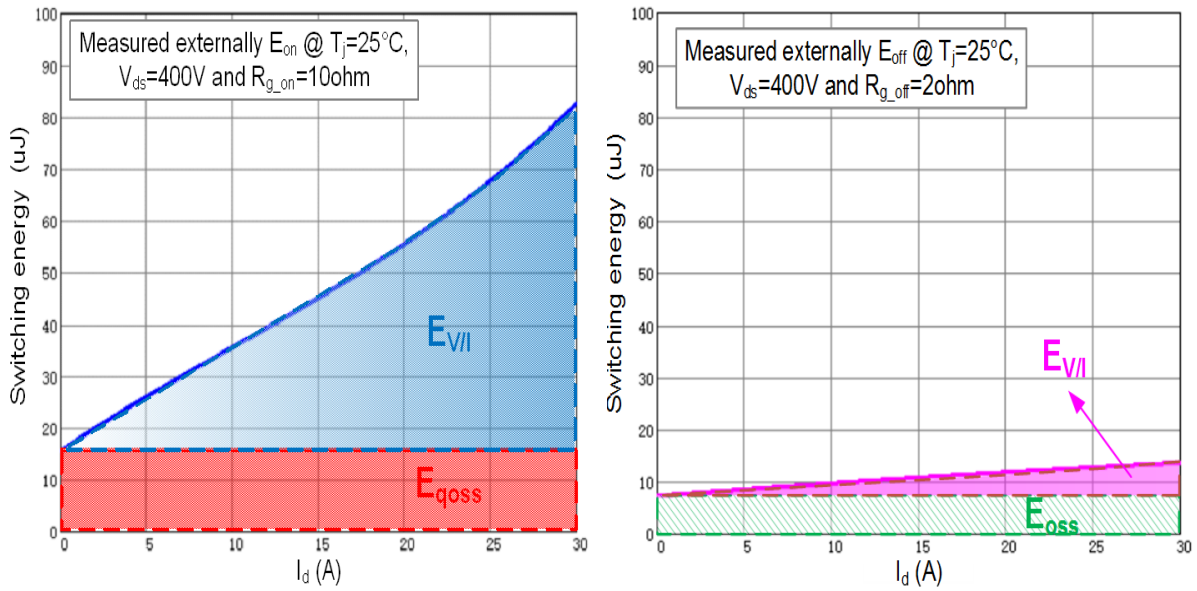

External loss measurements

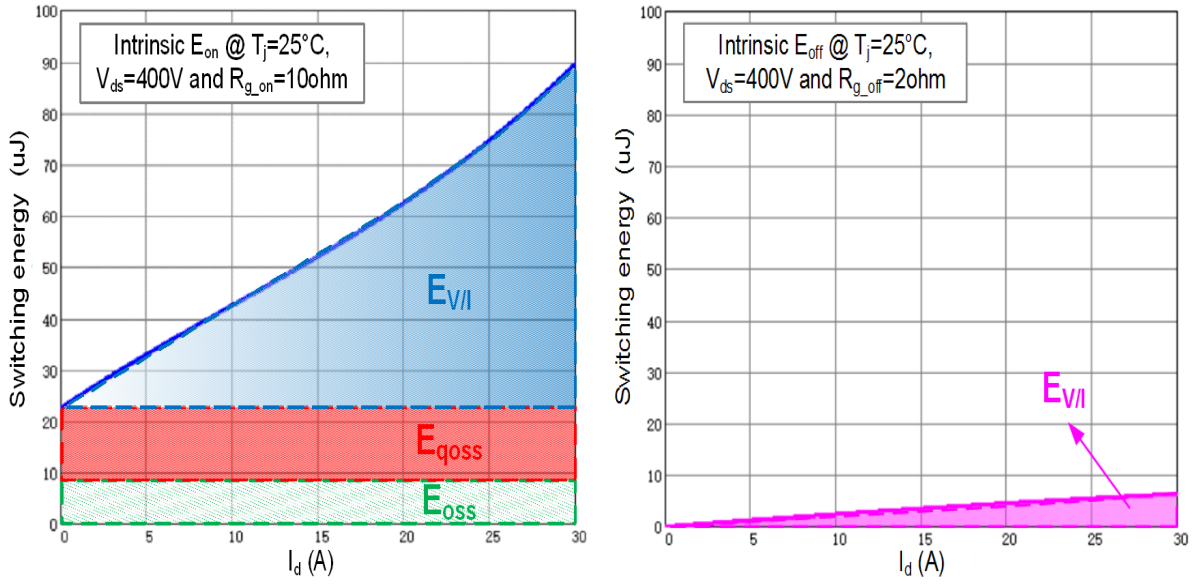

Intrinsic device losses

Eon Switching Loss

E_{VIon} loss: The overlapping loss of voltage and current during the switching period.

E_{oss} loss: The internal discharge of S2 C_{oss} through S2. This occurs within the GaN device and is not captured by an oscilloscope measurement*.

E_{qoss} loss: The charging of C_{oss} of S1, the high side device. Because S1 isn't conducting, C_{oss} is charged through S2.

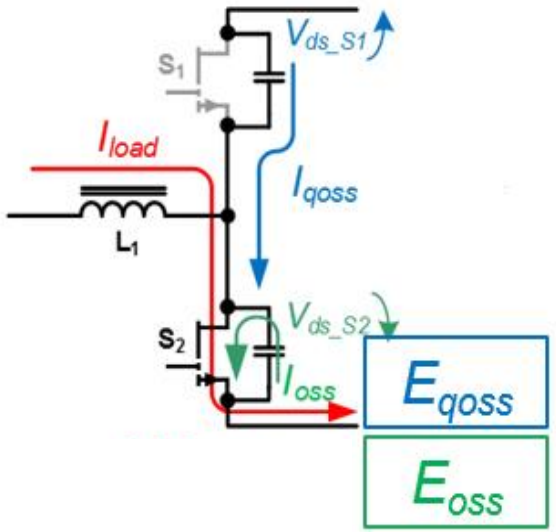

External loss measurements	Intrinsic device losses
$E_{VIon} + E_{qoss}$	$E_{VIon} + E_{qoss} + E_{oss}$

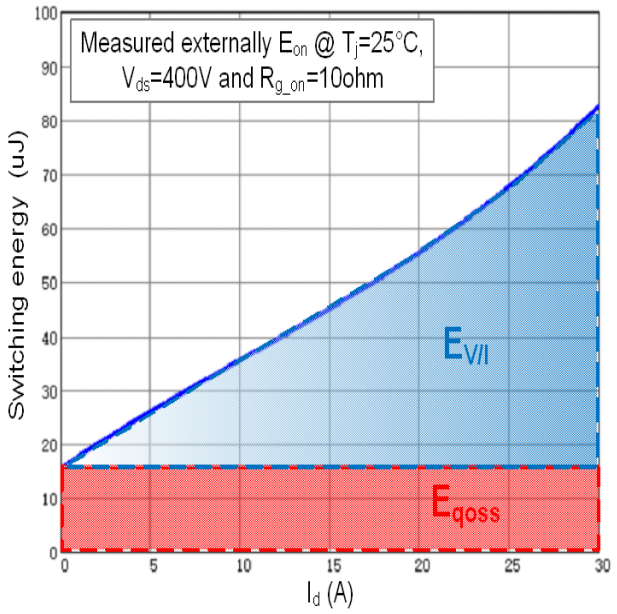

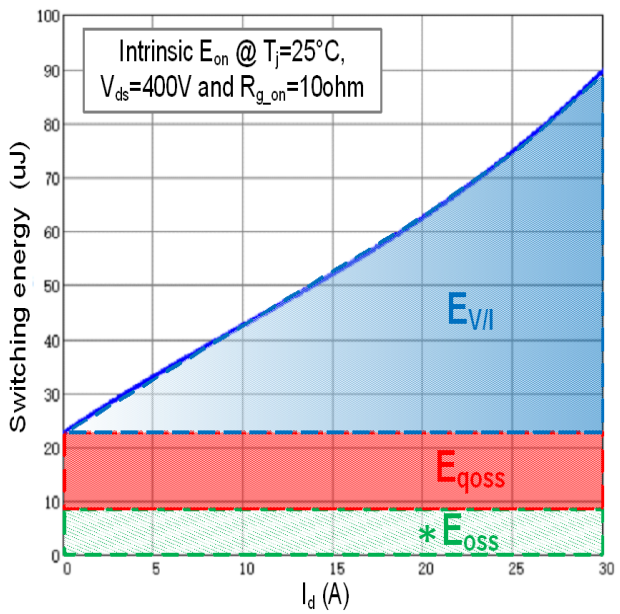

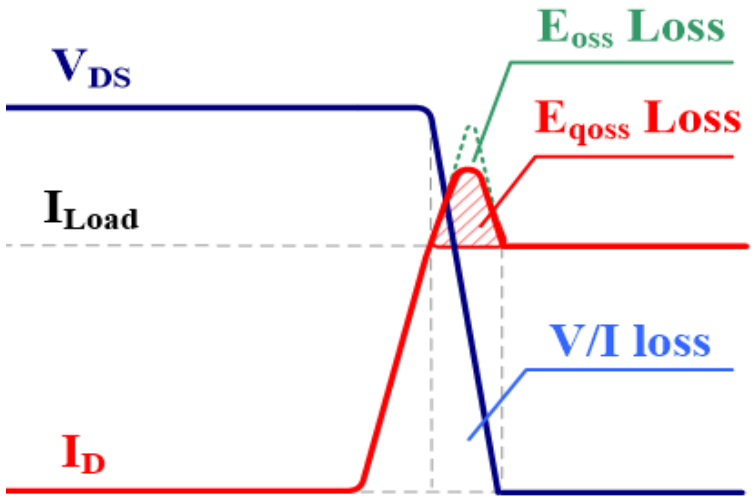

There is an extra I_{DS} current spike caused by displacement current of high side C_{oss}

Eoff Switching Loss

E_{VIoff} loss: The overlapping loss of voltage and current during the switching period

E_{oss} loss: E_{oss} appears as a measured loss, however, it is not part of the turn-off loss. It is dissipated into S2 at the next switch turn-on

External loss measurements	Intrinsic device losses
$E_{VIoff} + E_{oss}$	E_{VIoff}
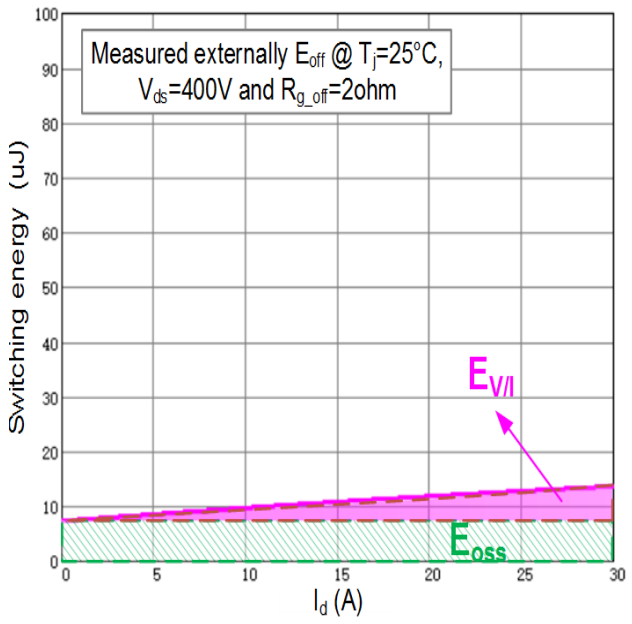	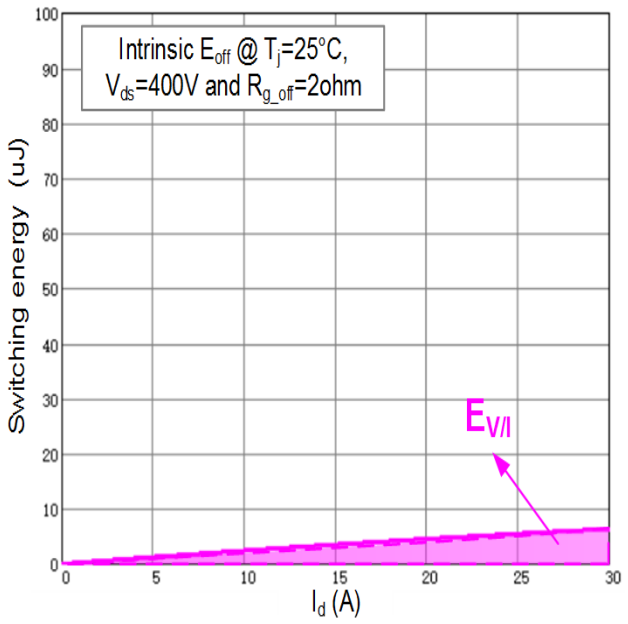

During the turn-off period:

- When $V_{GS} < V_{GS(th)}$
  - The E-HEMT is not conducting.
  - I_{load} charges C_{oss} → reactive power = E_{oss} @ V_{DS}. There is no real loss during this period.
- The measured E_{off} include C_{oss} energy,. This is not part of the turn-off loss. Instead, it will be dissipated at the next switch turn-on
- The load current defines the turn-off dV/dt and rise time, not V_{GS}

GS66508 Eon/Eoff test results

Eon = 15uJ @ V_{DS}=400V, I_D=0A (Eqoss Loss* only)

Channel de-skewing is critical for accurate Eon/Eoff test results. De-skewing insures that all current and voltage probe delays are the same. Manually calibrate the current shunt channel timing against Vds. The rising edge of Id should match the falling edge of Vds.

*For more details on the Eqoss loss of APEC'18 paper:
https://gansystems.com/wp-content/uploads/2018/04/APEC18-Parasitic-Capacitance-Eqoss-Loss-Mechanism-Calculation-and-Measurement-in-Hard-Switching-for-GaN-HEMTs.pdf

GS66508 Eon/Eoff test results: Eon

Eon = 87uJ @ V_{DS}=400V, I_D=30A

GS66508 Eon/Eoff test results: Eoff

Eoff = 15uJ @ V_{DS}=400V, I_D=30A

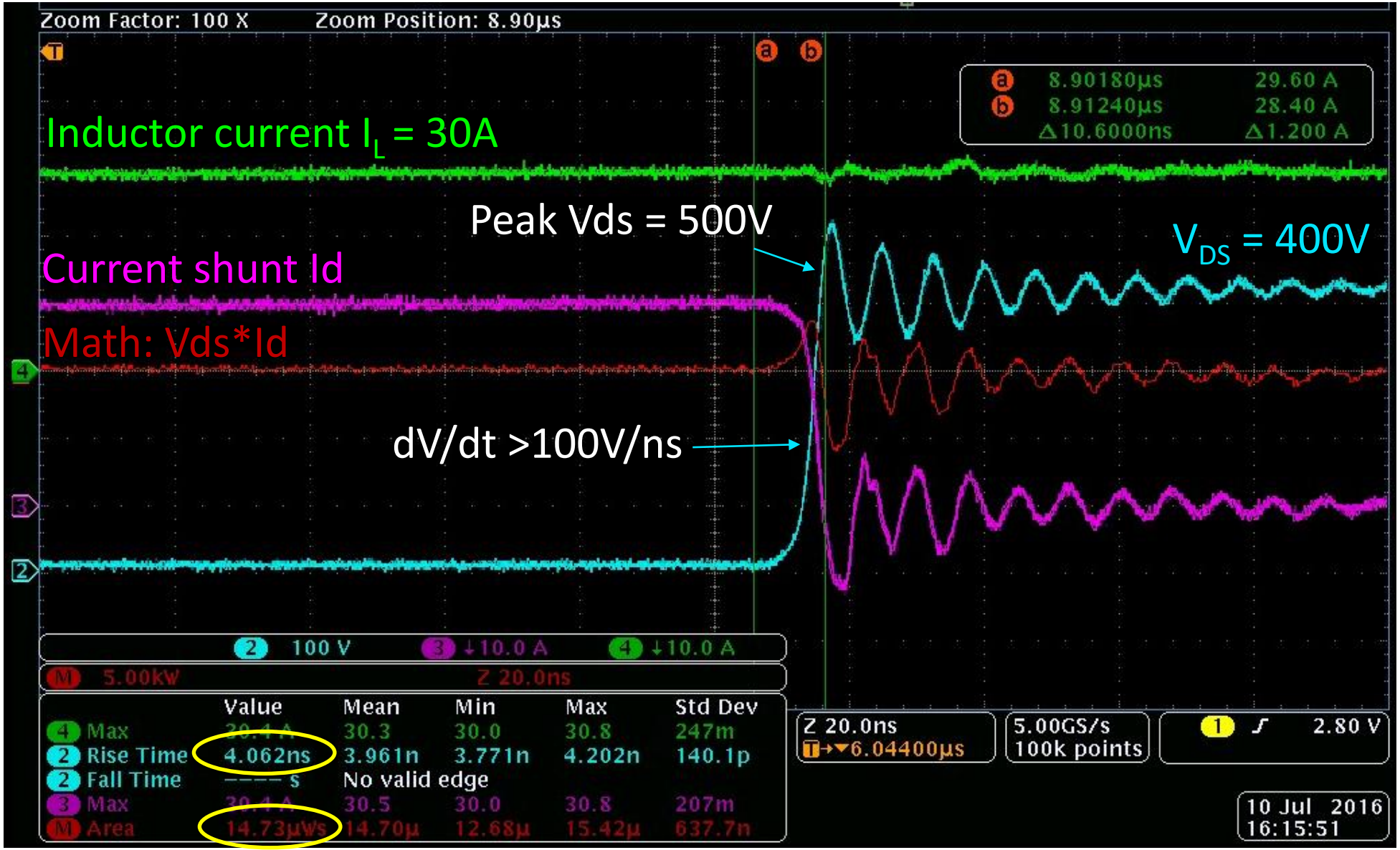

This is an example of a well conducted Eoff test. The scope shot accurately captures the ultra-fast slew rate of a GaN E-HEMT at a dV/dt > 100V/ns.

Fast switching results in very low switching losses, and ultimately enable high efficiency operating even at high switching frequencies.

Outline

Overview

- The Importance of Measurement Technique

GaN E-HEMTs Switching Test Measurement Techniques

- Short loops matter
- Low-side voltage probing
- High-side floating voltage probing
- Current sensing for high-speed GaN E-HEMTs

Double Pulse Switching Test

- Double Pulse Switch Test Set up
- 400V/30A hard switching turn-on and turn-off test results

Switching Energy Eon/Eoff Measurement

- V_{GS}, V_{DS}, I_{DS} probing techniques to increase measurement accuracy
- Switching loss distribution of GaN E-HEMTs
- Eqoss measurement example
- 400V/30A Eon/Eoff Test results

Summary and Conclusions

Appendix: Bandwidth Requirements

Summary and Conclusion

Accurately characterizing the ultra-fast switching speeds of GaN Systems' GaN E-HEMTs requires attention to test methodologies.

This application note provided an overview of appropriate measurement equipment and measurement techniques. In addition, two common transistor characterization tests and results were presented: The Double Pulse Switching Test and Eon/Eoff Test.

With the information provided in this document, power electronic designers can accurately characterize GaN Systems' E-HEMTs and design power systems that are optimized and differentiated in performance.

Outline

Overview

- The Importance of Measurement Technique

GaN E-HEMTs Switching Test Measurement Techniques

- Short loops matter
- Low-side voltage probing
- High-side floating voltage probing
- Current sensing for high-speed GaN E-HEMTs

Double Pulse Switching Test

- Double Pulse Switch Test Set up
- 400V/30A hard switching turn-on and turn-off test results

Switching Energy Eon/Eoff Measurement

- V_{GS}, V_{DS}, I_{DS} probing techniques to increase measurement accuracy
- Switching loss distribution of GaN E-HEMTs
- Eqoss measurement example
- 400V/30A Eon/Eoff Test results

Summary and Conclusions

Appendix: Bandwidth Requirements

Appendix: The Impact of Bandwidth on Measurement

The measurement bandwidth is determined by the capability of oscilloscope and probes

$$Bandwidth_{measurement} = \frac{1}{\sqrt{\frac{1}{Bandwidth^2{}_{Scope}} + \frac{1}{Bandwidth^2{}_{Probe}}}}$$

The delay caused by limited bandwidth is

$$t_{rise} \approx \frac{0.35}{Bandwidth_{measurement}}$$

Circuit resonant frequency is

$$f_r = \frac{1}{2\pi\sqrt{L_{loop} \cdot C}}$$

L_{loop}: loop parasitic inductance
C: parasitic capacitance

Due to the ultra-fast switching transition and low parasitic capacitance of GaN E-HEMTs, high-bandwidth equipment is required for measurement. Refer to pages 7-9 for detailed recommendations

* Source of equations: Tektronix: Understating Oscilloscope Bandwidth, Rise Time and Signal Fidelity

Product and application support at

gansystems.com