GaN Systems

GN010 Application Note

EZDrive® Power Stage Solution for GaN Systems' GaN Transistor

June 2020

GaN Systems Inc.

Contents

Using the controller/driver to drive GaN

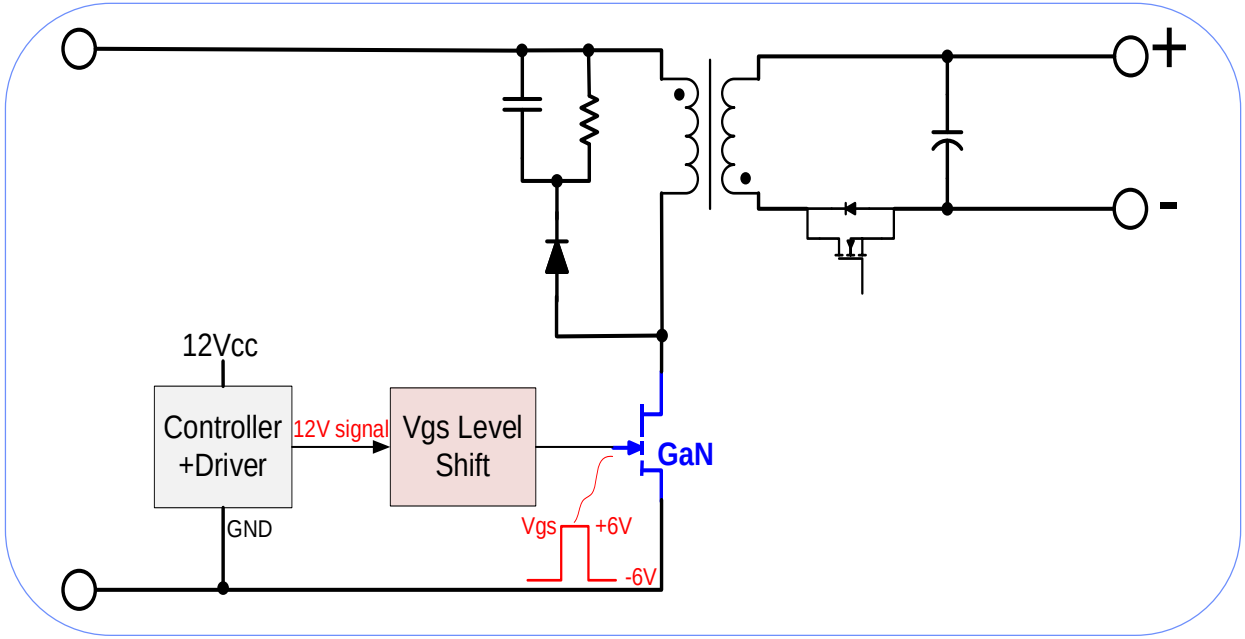

- Controllers with Drive have an output signal of 12V
- The GaN transistor needs +6V for turn on
- Additional Vgs level shift is needed

Solutions: Integrated or Discrete GaN

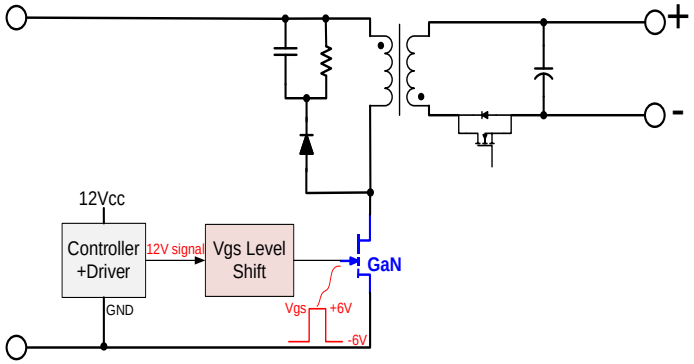

- Controllers with Drive have an output signal of 12V
- GaN transistor need +6V for turn on
- Additional Vgs level shift is needed

Integrated

Monolithic-Integrated GaN

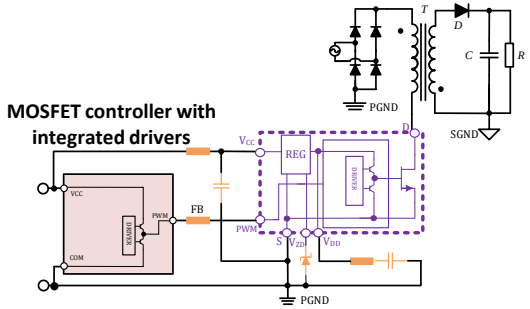

- Internal regulator to convert 12V/0V to +6V/0V

Discrete

GaN Systems EZDrive Circuit + GaN

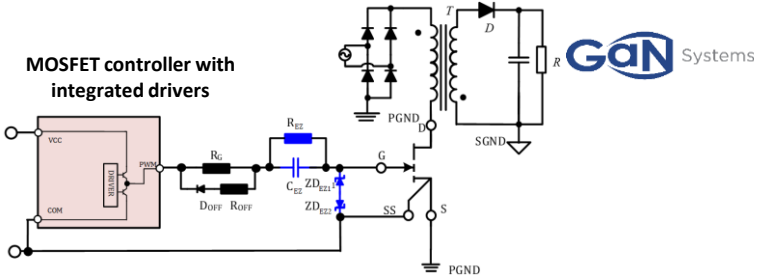

- Level shift circuit [1] to convert 12V/0V to +6V/-6V

Reference

[1] Laszlo Balogh, "Design And Application Guide for High Speed MOSFET Gate Drive Circuits", Texas Instruments Incorporated, 2002

Contents

GaN discrete versus integrated design

GaN Systems EZDrive Solution

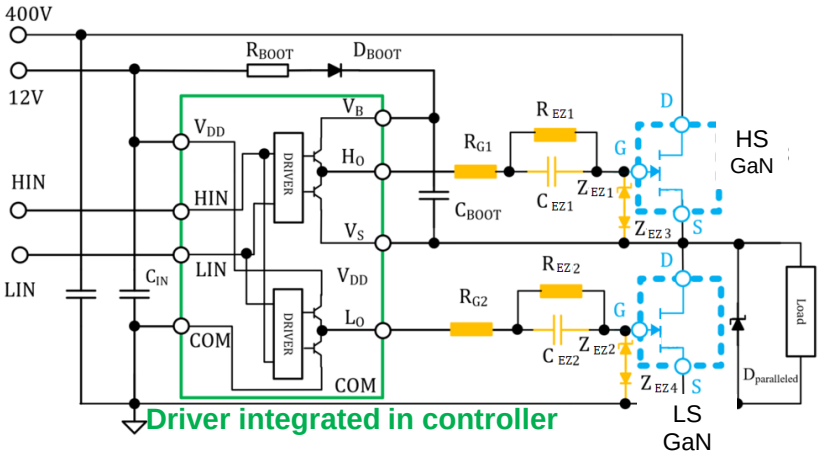

Monolithic-integrated Solution

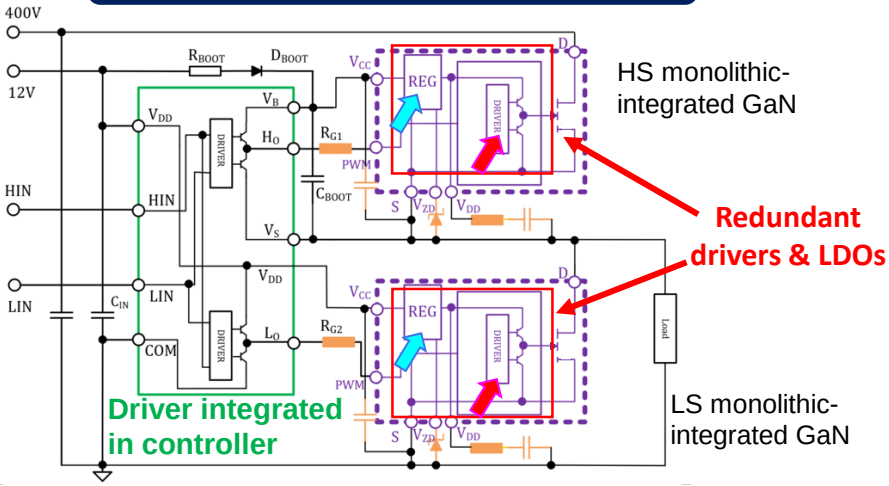

Fewest circuit blocks + standard componentry (cost effective: same number of passive components, no extra driver)	**Integrated = 2 extra Drivers + 2 extra LDOs** (higher cost and complexity)
Control Turn-on, turn-off, negative drive (optimized EMI and efficiency)	**Control of turn-on only** (sub-optimal performance)

GaN Systems' GaN | HV HB Bootstrap Controller/Driver | External Components | Integrated GaN + driver

Discrete solution is lower in cost and better for EMI and efficiency

GaN discrete versus integrated T_{ON}/T_{OFF} control

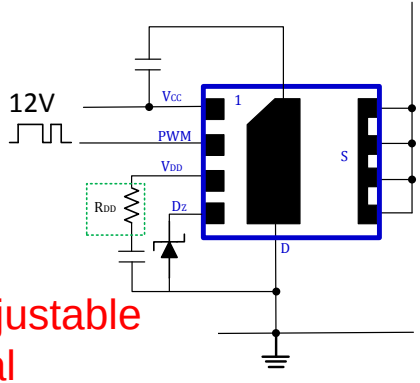

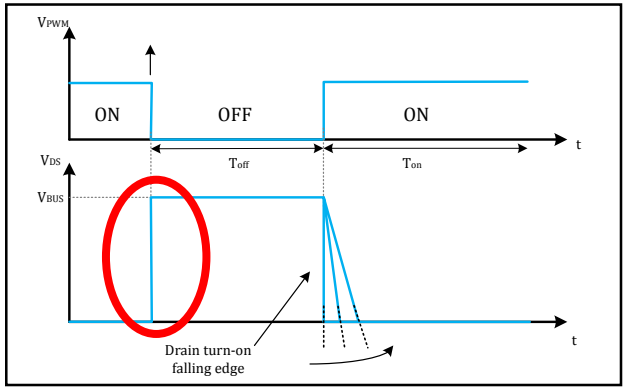

Monolithic-integrated GaN

- Drain turn-off rising edge NOT adjustable
- Limits design flexibility, not optimal

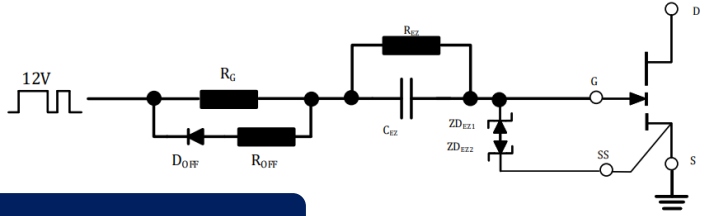

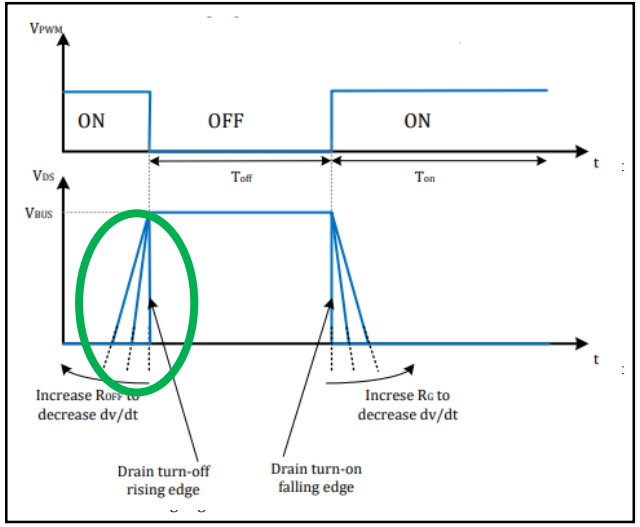

Discrete GaN with EZDrive circuit

- Drain turn-off rising **AND** turn-on falling edge adjustable
- Optimized EMI and efficiency

Contents

EZDrive Circuit

GaN Systems' **EZDrive** circuit is a low cost, easy way to implement a **GaN driving circuit.**

- Not original
- Enables 12V driver to drive 6V GaN
- Level shift circuit composed of 4 components
- Turn ON / OFF slew rate is controllable with external resistors Rg to optimize EMI
- Adjustable to any power level, any frequency, and any standard controller/driver
- Applies to any controllers with single, dual, or high-side/low-side drivers

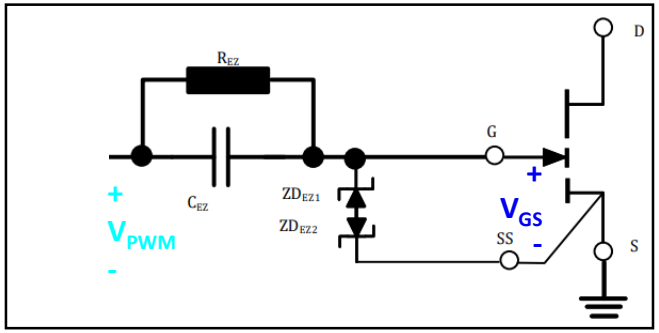

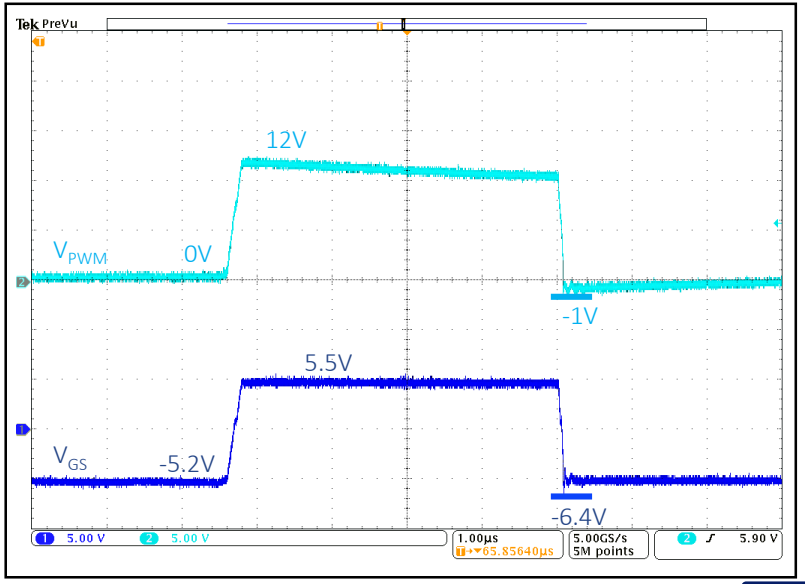

Operation modes of EZDrive solution

Mode 1: C_{BOOT} Charging (HS GaN: off; LS GaN: on)

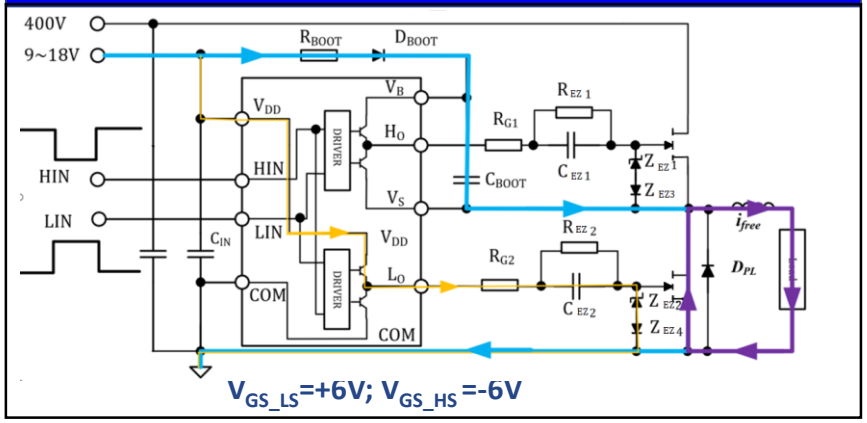

V_{GS_LS}=+6V; V_{GS_HS}=-6V

Mode 2: C_{BOOT} Charging (HS GaN: off; LS GaN: off)

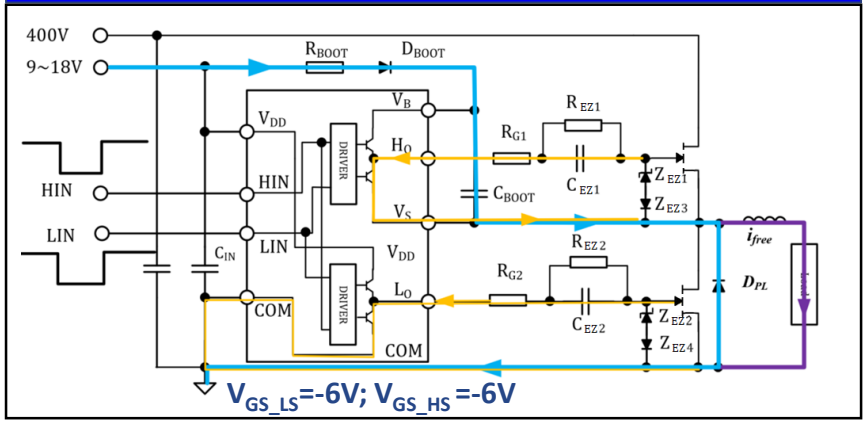

V_{GS_LS}=-6V; V_{GS_HS}=-6V

Mode 3: C_{BOOT} Discharging (HS GaN: on; LS GaN: off)

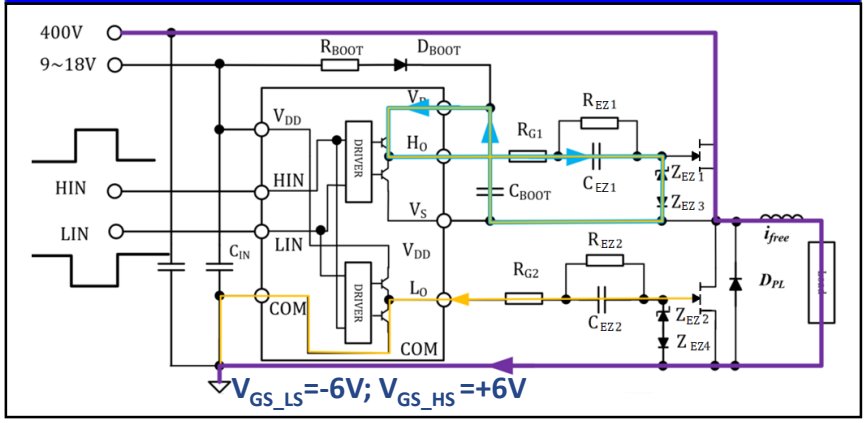

V_{GS_LS}=-6V; V_{GS_HS}=+6V

Power Flow →

Gate Driving Current Flow →

C_{BOOT} Current Flow →

- EZDrive operation modes in half bridge are **similar to** conventional non-isolated Bootstrap high side/low side driver
- Allows **wide controller bias input voltage range** (9~18V)

EZDrive circuit application examples

Typical applications with the EZDrive circuit

- Flyback
- Half Bridge
- Boost PFC

Solution = GaN discrete + EZDrive circuit + Controller

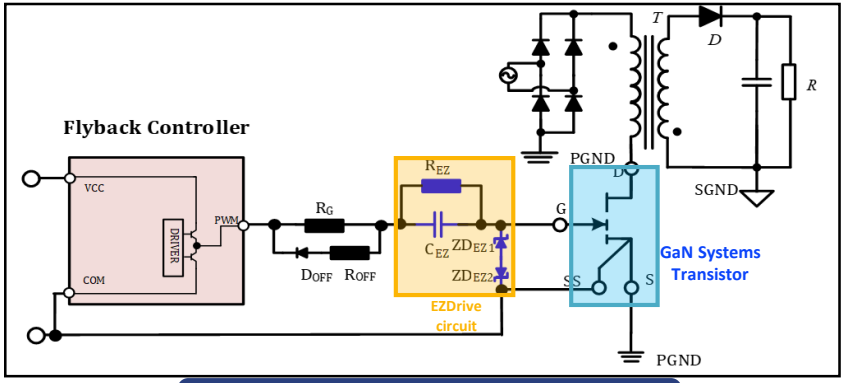

Flyback with EZDrive solution

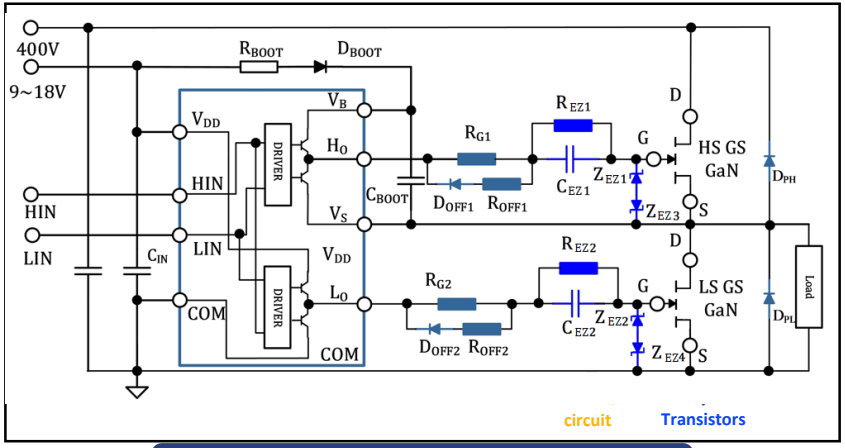

Half Bridge with EZDrive solution

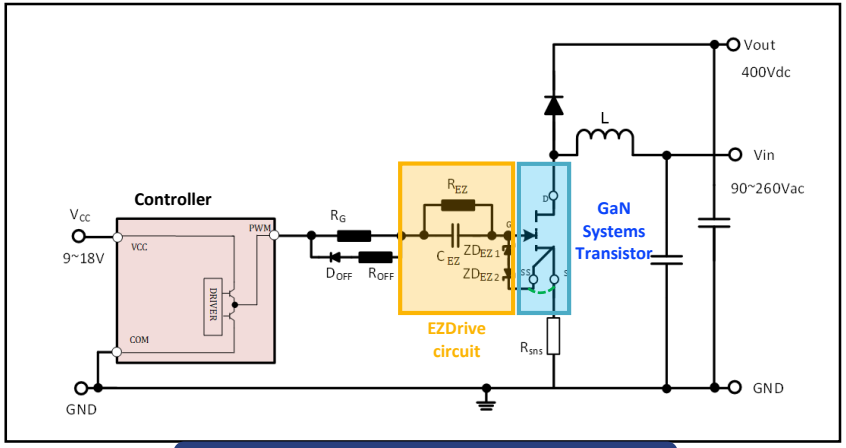

Boost PFC with EZDrive solution

Flyback EZDrive circuit

- Flyback controller examples include NCP1342 and NCP1250
- The circuit and tables show recommended values for the Flyback EZDrive circuit
  - As an option, similar to silicon MOSFET-based designs, efficiency and EMI can be further optimized with the labeled “optional circuit”

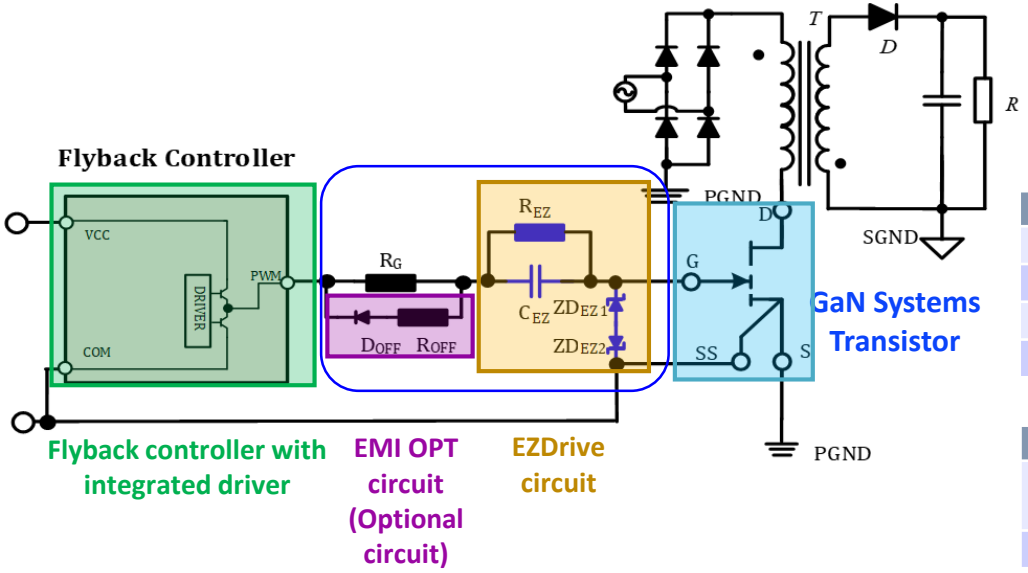

EZDrive Circuit

Symbol	Value	Footprint	Function
R_{EZ}	~ 10 kΩ	0402 / 0603	Keep the driving voltage
C_{EZ}	~ 47 nF	0402 / 0603	Hold negative voltage for turning off
Z_{EZ1}	5.6 V Zener	SOD923F / 0603	Clamp the positive gate voltage
Z_{EZ2}	9.1 V Zener	SOD923F / 0603	Clamp the negative gate voltage

Efficiency and EMI Optimization Circuit (Optional)

Symbol	Value	Rec. Footprint	Function
D_{OFF}	20V Diode 1A	SOD923F / 0603	Enable independent turn-off speed control
R_{OFF}	0 Ω	0402 / 0603	Control turn-off speed

Half Bridge EZDrive circuit

- Half Bridge controller examples include NCP1399 and NCP13992
- The circuit and tables show recommended values for the Half Bridge EZDrive circuit
  - As an option, similar to silicon MOSFET-based designs, efficiency and EMI can be further optimized with the labeled "optional circuit"

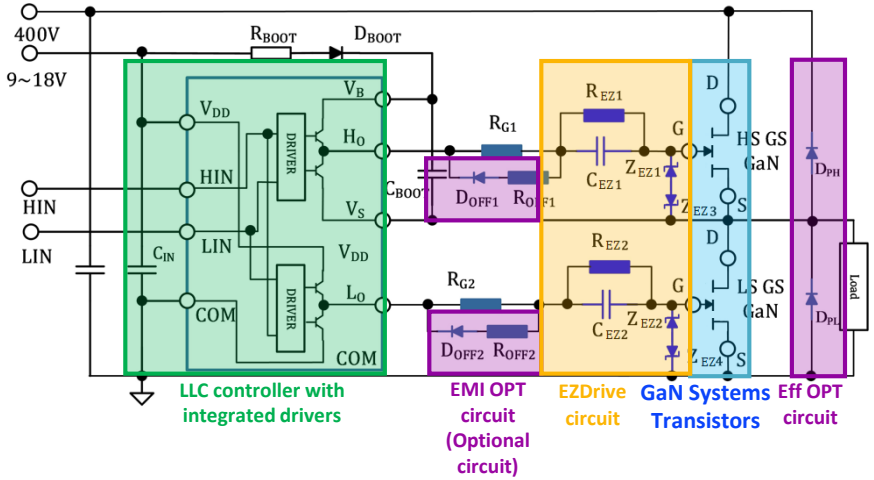

EZDrive Circuit

Symbol	Rec. Value	Rec. Footprint	Function
$R_{EZ1,2}$	~ 10 kΩ	0402 / 0603	Keep the driving voltage
$C_{EZ1,2}$	~ 47 nF	0402 / 0603	Hold negative voltage for turning off
$Z_{EZ1,2}$	5.6 V Zener	SOD923F / 0603	Clamp the positive gate voltage
$Z_{EZ3,4}$	9.1 V Zener	SOD923F / 0603	Clamp the negative gate voltage

Efficiency and EMI Optimization Circuit

Symbol	Rec. Value	Rec. Footprint	Function
$D_{OFF1,2}$	20V DIODE 1A	SOD923F / 0603	Optional for Enabling independent turn-off speed control
$R_{OFF1,2}$	0 Ω	0402 / 0603	Optional for Controlling turn-off speed
D_{PL}	600V FRD 1A	SOD123F / SMA	Avoid C_{BOOT} overcharging, for reduced low side P_{DT} (Note 1)
D_{PH}	600V FRD 1A	SOD123F / SMA	Optional for reduced high side P_{DT} (Note 1)

Note 1: D_{PH} and D_{PL} are not required if the controller has an internal Sync Boot function to regulate bootstrap voltage

Boost PFC EZDrive circuit

- Boost PFC controller examples include NCP1616, NCP1615, and L6562A
- The circuit and tables show recommended values for the Boost PFC EZDrive circuit
  - As an option, similar to silicon MOSFET-based designs, efficiency and EMI can be further optimized with the labeled “optional circuit”

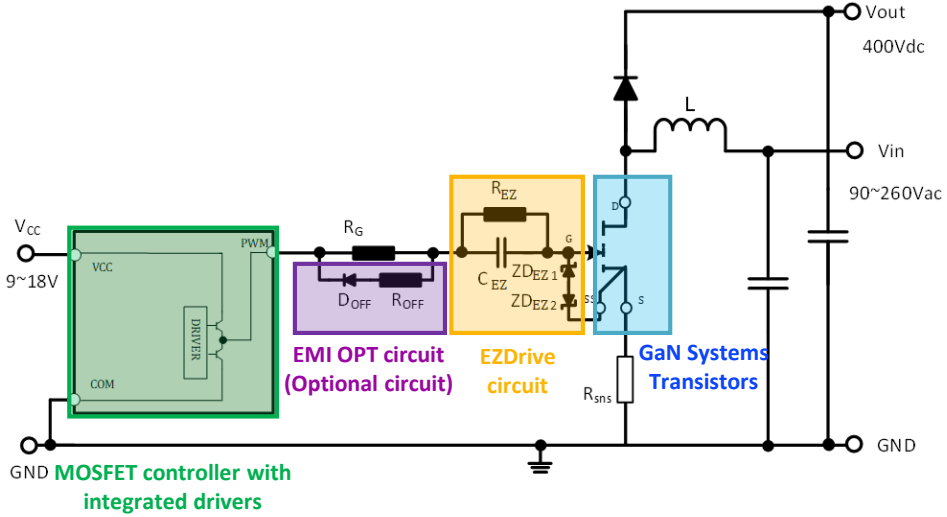

EZDrive Circuit

Symbol	Rec. Value	Rec. Footprint	Function
R_{EZ}	~ 10 kΩ	0402 / 0603	Keep the driving voltage
C_{EZ}	~ 47 nF	0402 / 0603	Hold negative voltage for turning off
Z_{EZ1}	5.6 V Zener	SOD923F / 0603	Clamp the positive gate voltage
Z_{EZ2}	9.1 V Zener	SOD923F / 0603	Clamp the negative gate voltage

Efficiency and EMI Optimization Circuit (Optional)

Symbol	Rec. Value	Rec. Footprint	Function
D_{OFF}	20V DIODE 1A	SOD923F / 0603	Enable independent turn-off speed control
R_{OFF}	0 Ω	0402 / 0603	Control turn-off speed

Contents

Flyback topology verification test setup

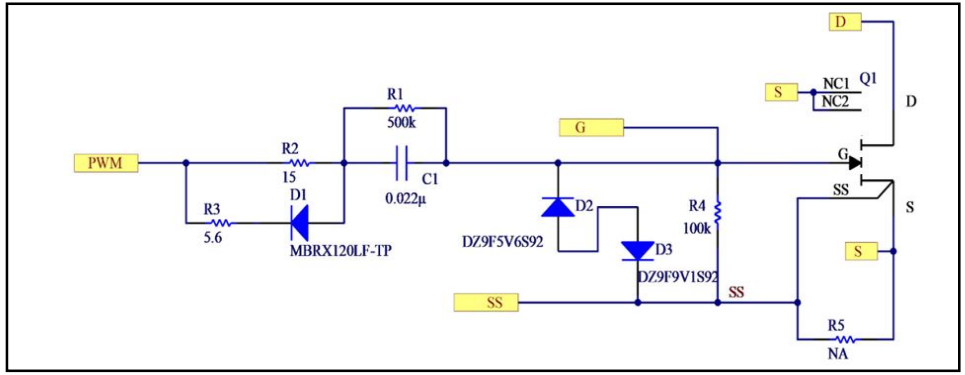

Flyback EZDrive circuit with Efficiency optimization

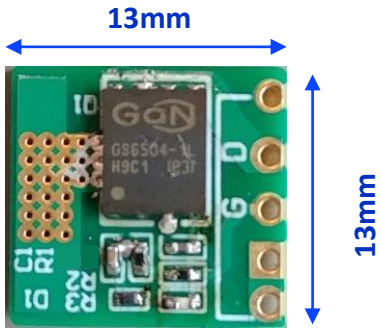

Front side

Back side

- Populate GaN daughter card with GaN transistor and EZDrive components
- Modify off-the-shelf adapter
- Solder in GaN + EZDrive circuit daughter board

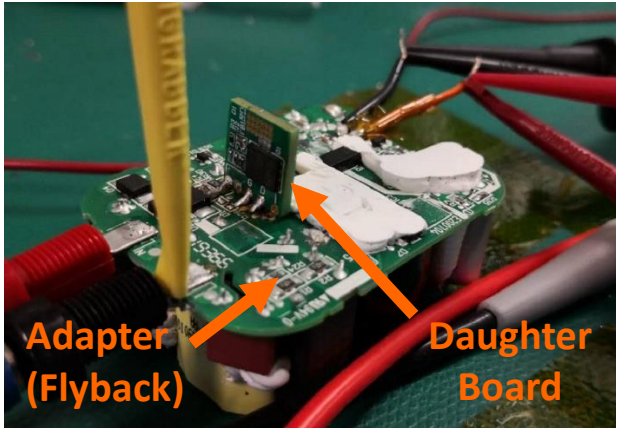

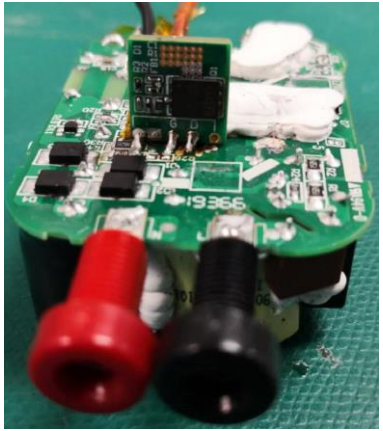

Flyback topology verification data

EZDrive Waveforms (V_{PWM} & V_{GS}) @ full load (18V/1.67A output)

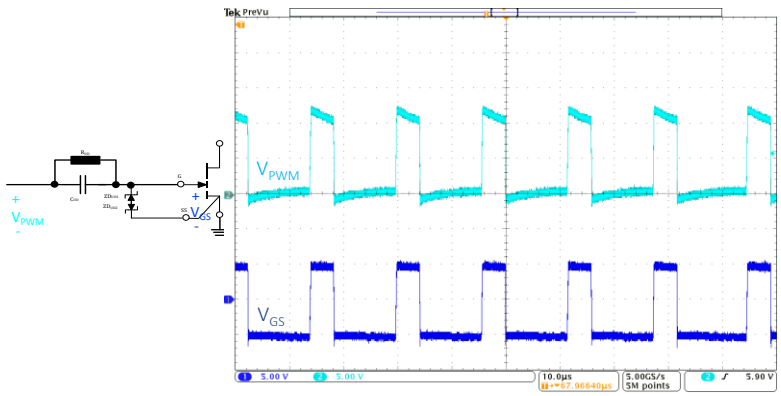

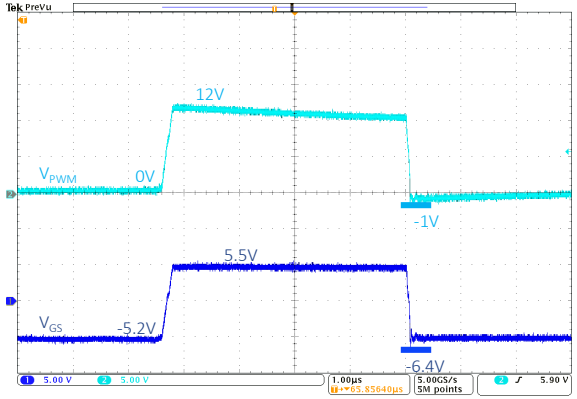

Temp. Distribution @ full Load

115Vac input at 18V/1.67A output

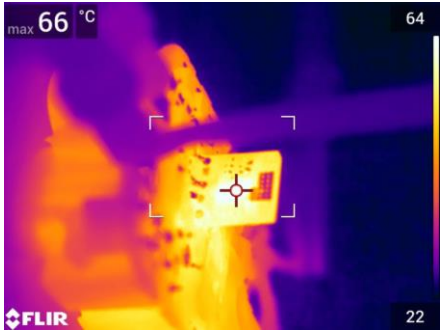

Skip Mode Operation @ 5% Loads

Skip frequency:1.2KHZ

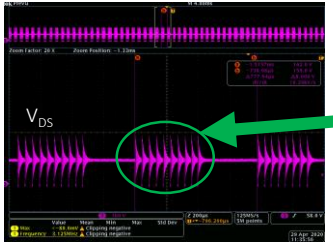

Pulse frequency:22KHZ

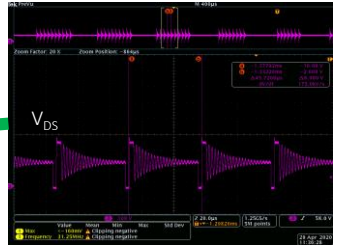

115Vac input, Average frequency=13KHz

Skip frequency:1.6KHZ

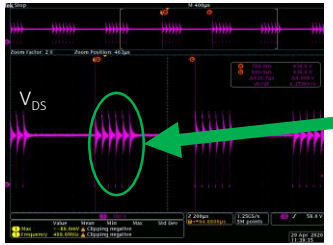

Pulse frequency:22KHZ

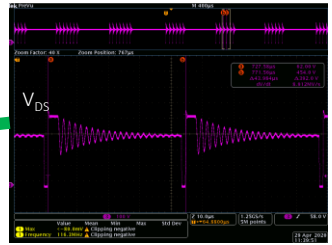

230Vac input, Average frequency=8KHz

230Vac input at 18V/1.67A output

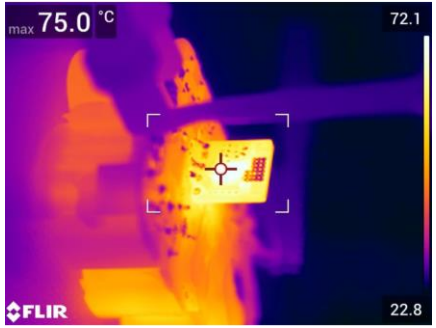

- **No overshoot/undershoot** on V_{GS} in all operating conditions
- **Low operating temperatures**

Flyback topology verification data

Temp. Distribution@ full Load

115Vac input at 18V/1.67A output

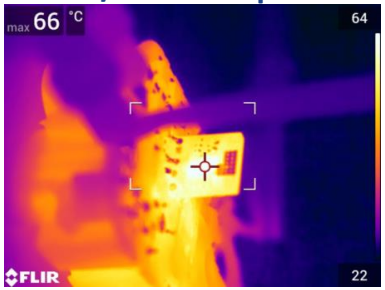

230Vac input at 18V/1.67A output

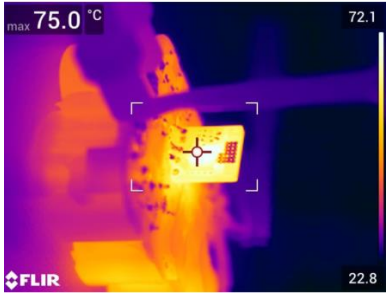

EZDrive Waveforms (V_{PWM} & V_{GS}) @ full load (18V/1.67A output)

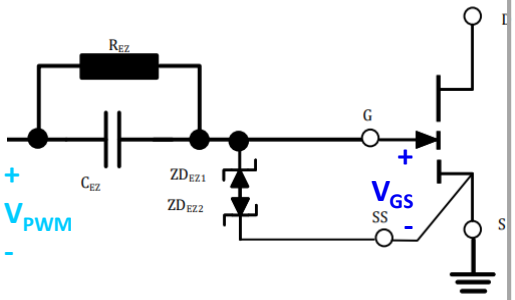

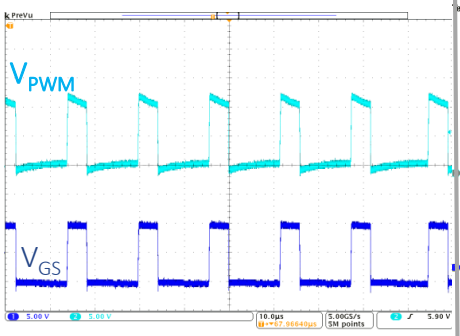

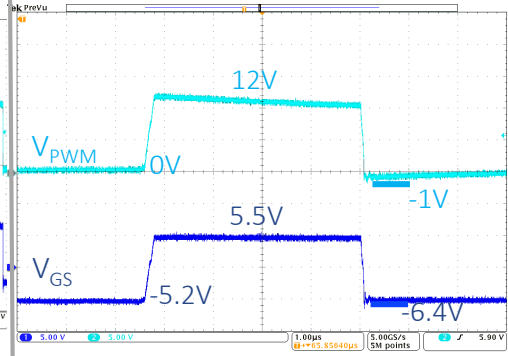

Skip Mode Operation @ 5% Loads

Skip frequency:1.2KHZ

Pulse frequency:22KHZ

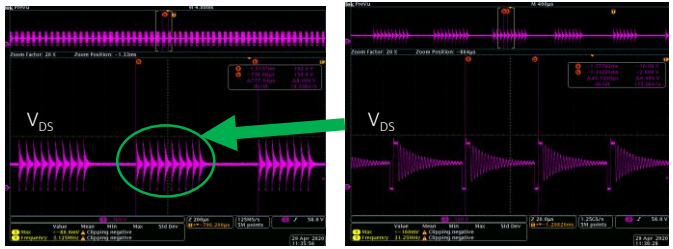

115Vac input, Average frequency=13KHz

Skip frequency:1.6KHZ

Pulse frequency:22KHZ

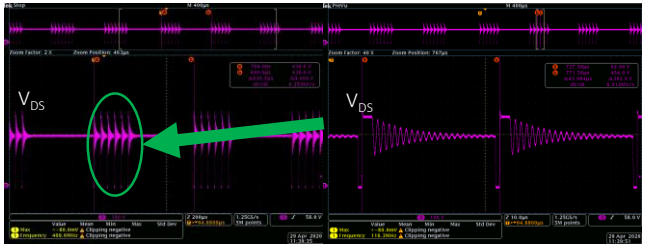

230Vac input, Average frequency=8KHz

- **No overshoot/undershoot** on V_{GS} in all operating conditions
- **Low operating temperatures**

Half Bridge LLC topology verification setup

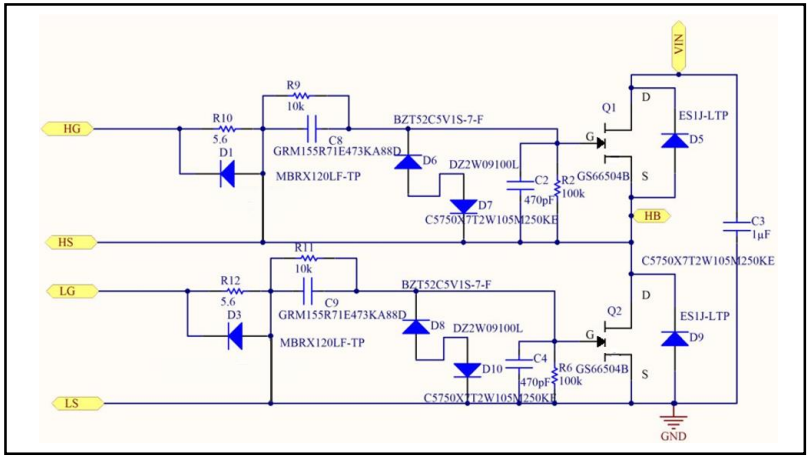

Half Bridge LLC EZDrive schematic

Test board (Top View)

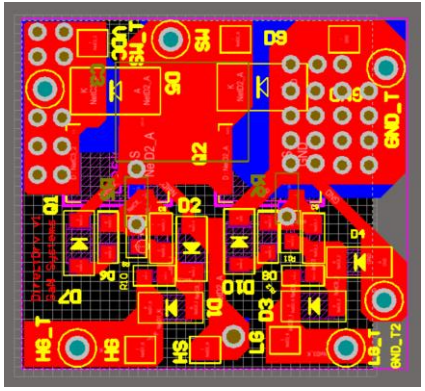

Half Bridge EZDrive layout

GS66504B GaN x 2

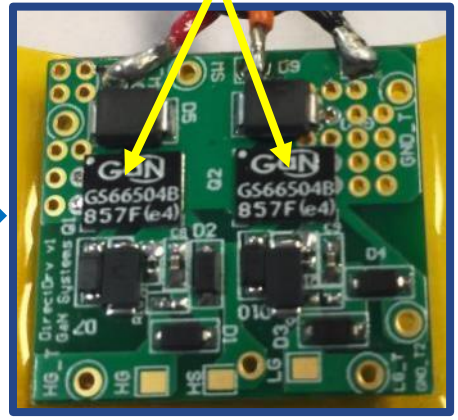

EZDrive Daughter Card

Test board (Bottom View)

Half Bridge LLC verification data

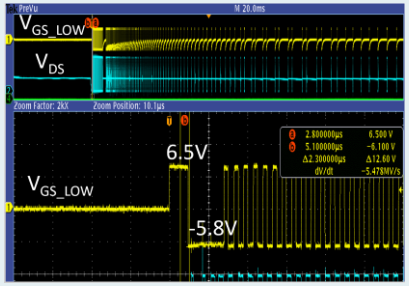

@ no load (I_{out}=0A)

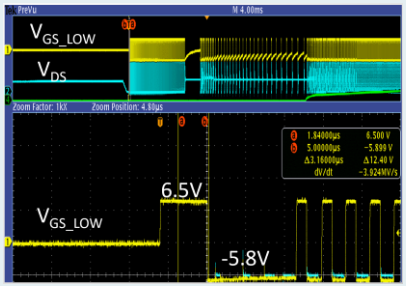

@ full load (I_{out}=20A)

Start-up Process

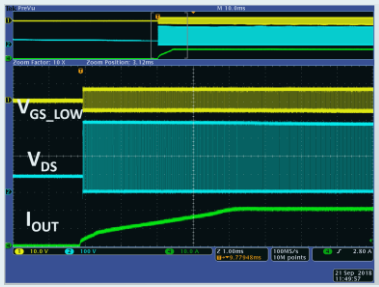

0A to 20A

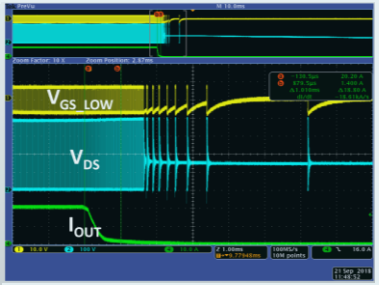

20A to 0A

Load Step Change

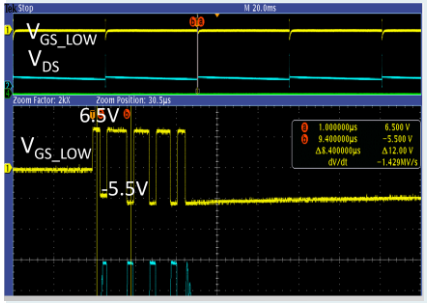

@ no load (I_{out}=0A)

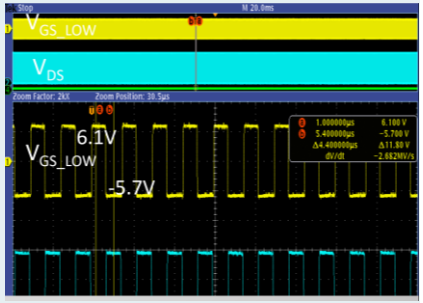

@ full load (I_{out}=20A)

Static Operation

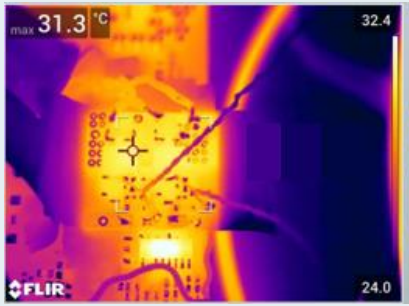

@ half load (10A)

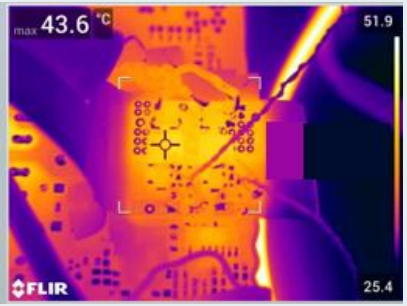

@ full load (20A)

Temperature Distribution

- **No overshoot/undershoot** on V_{GS} & V_{DS} in all operating conditions
- **Low operating temperatures**

Boost PFC topology verification test setup

GaN Systems

EZDrive PFC daughter card schematic

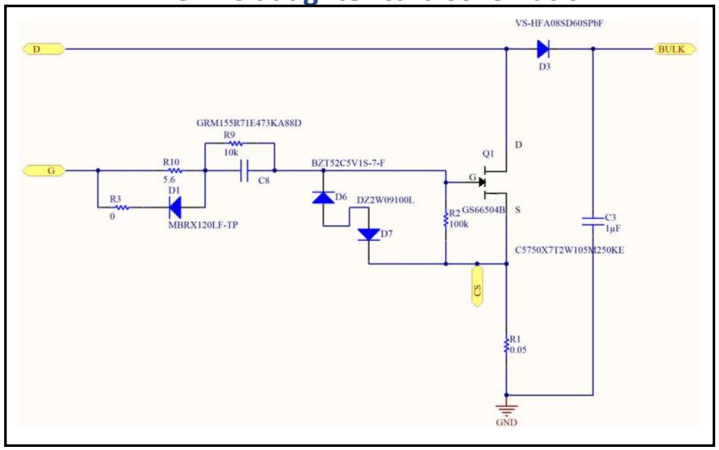

EZDrive PFC daughter card

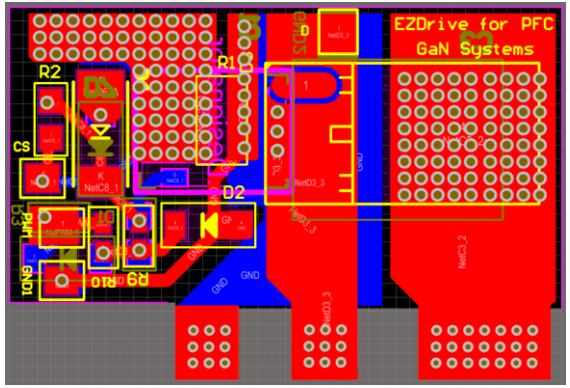

PFC with transition-mode controller L6562A (Top View)

PFC with transition-mode controller L6562A (Side View)

650V 15A GaN Transistor: GS66504B

top

bottom

Boost PFC daughter card layout

- For power greater than 65W, a daughter card is typically used in the design for improved thermal performance
- The table below provides layout recommendations

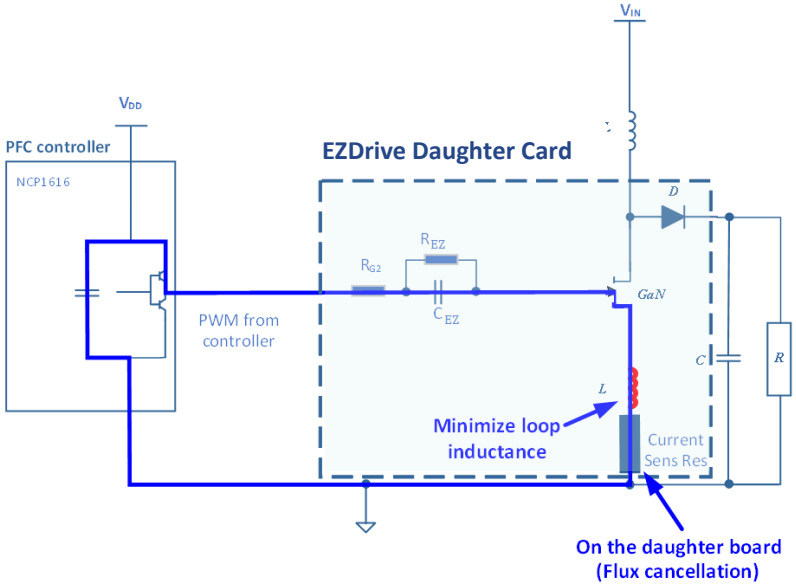

Layout recommendations	Objectives
• Shorten the trace length between the sensing resistor and Power GND	Reduce trace inductance
• Put the sensing resistor and GaN back-to-back on the 2-layer board • Using a 4-layer PCB will further reduce the common inductance and result in improved thermal performance	Flux cancellation → reduce the mutual inductance
• Optionally use SMD current sensing resistor instead of THT	Reduce the parasitic inductance

Boost PFC topology verification data

Start-up Process

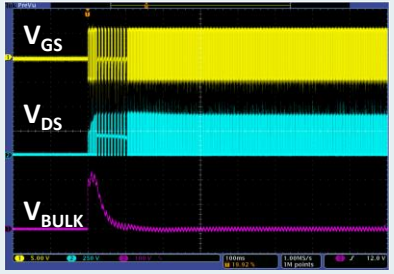

@ 110Vac & full load (400V,0.5A)

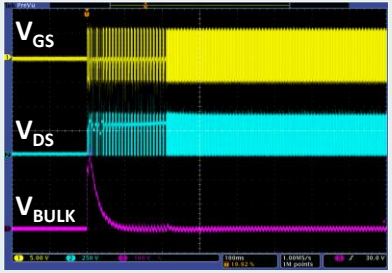

@ 220Vac & full load (400V,0.5A)

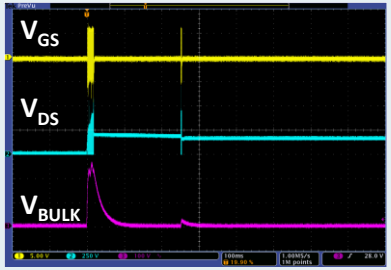

@ 110Vac & no load (400V,0A)

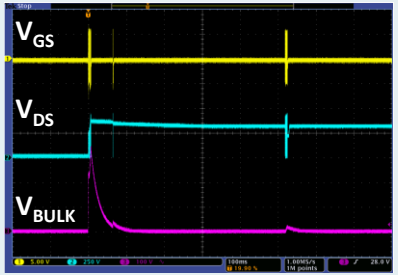

@ 220Vac & no load (400V,0A)

Static Operation

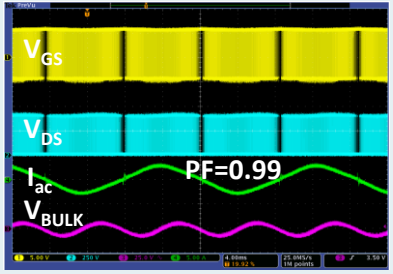

@ 110Vac & full load (400V,0.5A)

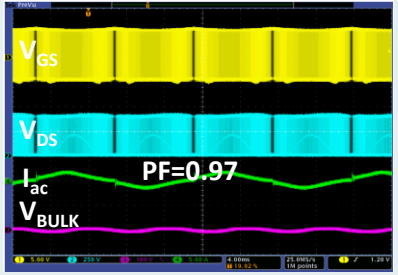

@ 220Vac & full load (400V,0.5A)

Load Step Change

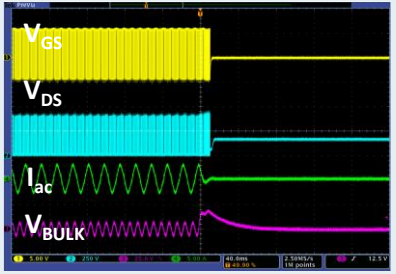

Full load to no load (0.5A to 0A)

No load to full load (0A to 0.5A)

- **No overshoot/undershoot on V_{GS} & V_{DS} in all operating conditions**

Contents

EZDrive circuit solution summary

Application Considerations	Silicon MOSFETS	GaN Systems EZDrive circuit	Monolithic GaN + driver
Total BoM Cost	✓	✓	✗
Choice of devices to optimize design	✓	✓	✗
Use controller driver, eliminate redundancy	✓	✓	✗
EMI control	✓	✓	✗
Power density	✗	✓	✓

GaN Systems EZDrive circuit is a low cost, easy way to implement a GaN driving circuit with a standard MOSFET controller with integrated driver

EZDrive solution resources

- GaN transistor information
  - https://gansystems.com/gan-transistors/

- EZDrive evaluation kit
  - https://gansystems.com/evaluation-boards/gs65011-evbez/

- Technical article
  - https://gansystems.com/wp-content/uploads/2020/01/Using-Mosfet-Controllers-to-Drive-GaN-EHEMTs.pdf

- Reference Designs
  - Contact us for information, samples and designs

GaN Systems

www.gansystems.com . North America . Europe . Asia