High-Efficiency 200W Stereo Class-D Amplifier & LLC Switched-Mode Power Supply w/PFC

User Guide
GS-EVB-AUD-AMP1-GS
GS-EVB-AUD-SMPS1-GS

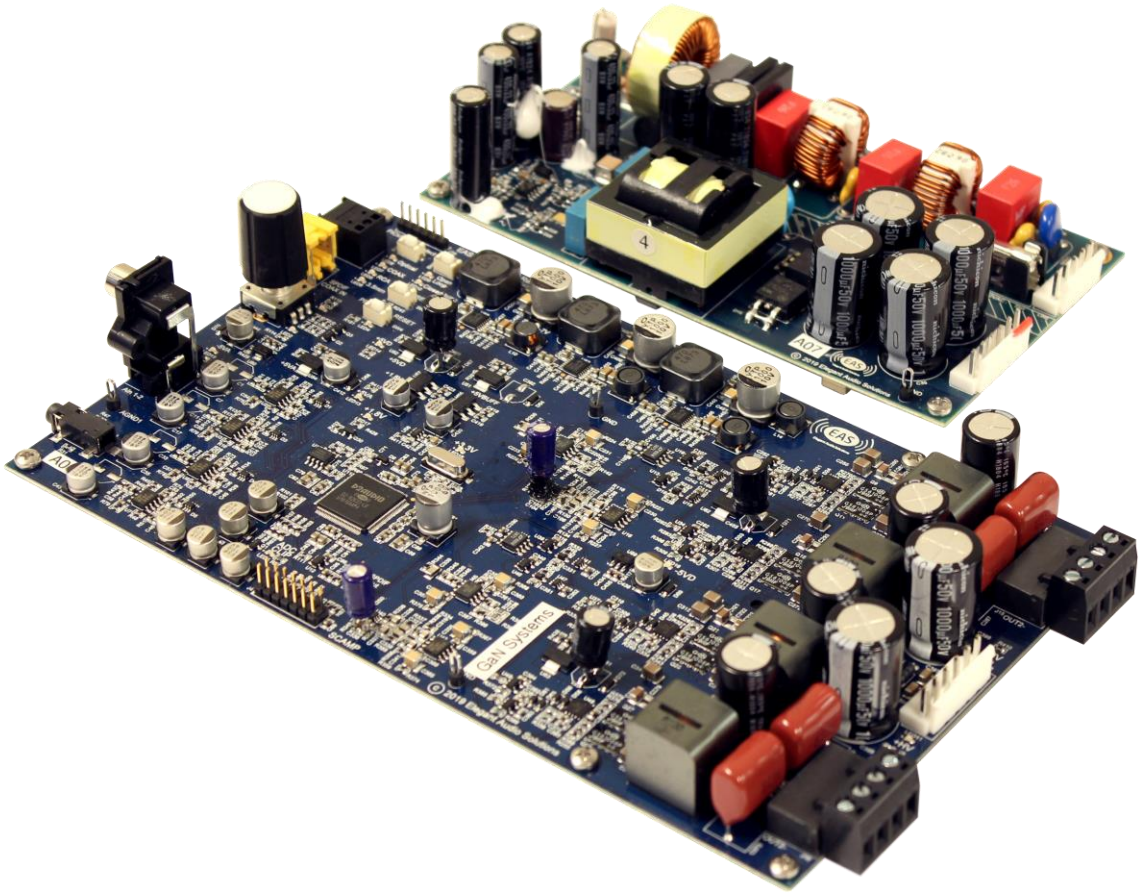

GaN Systems, Inc.
www.gansystems.com
productmarketing@gansystems.com

Table of Contents

1) Introduction

This user guide highlights the performance, benefits, and design considerations of a 400W (200W Stereo) Class-D Amplifier (GS-EVB-AUD-AMP1-GS) and companion Switched-Mode Power Supply with PFC (GS-EVB-AUD-SMPS1-GS). The high-performance Class-D Stereo Amplifier is configured to allow for both 'open-loop' and 'closed-loop' operations, with a variety of standard Audio Source Inputs. The Class-D Output Stage of the Audio Amplifier is implemented with 100V GaN enhancement mode HEMT devices (E-HEMT). The Switched-Mode Power Supply is controlled by advanced digital control methods coupled with 650V GaN enhancement mode E-HEMTs. This fan-less design solution achieves extremely high efficiency. It has high power density, reliable start-up, high efficiency, no heat sinking, low THD and low EMI.

The latest generation Renesas D2Audio 24-bit, 300MHz Digital Control Processor with embedded Digital Signal Processor (DSP) facilitates solutions which leverage the performance benefits of the 'open-loop' and 'closed-loop' topologies. This Amplifier design implements both 'open-loop' direct PWM control with programmable dead-time adjustment and PWM DAC-driven 'closed-loop' control with optimized, fixed dead-time provide the optimum trade-off between efficiency and performance over a wide operating range. The D2Audio DAE-3 integrated hardware accelerators and PWM Modulation engine allow the switching control and Fault recovery to be implemented in hardware and allow MCU resources to be utilized for low-frequency control, housekeeping and user interface functionality. In this reference design, Renesas' D2Audio DSP uses less than 25% of its available MIPs including all processing, optimization, and protection features.

GaN Systems' E-HEMTs are implemented in both the Class-D Amplifier and the SMPS design with patented Island Technology® cell layout for reduction of the device size and cost, while delivering substantially higher current and better performance than other GaN devices. GaN*PX*® packaging enables low inductance and thermal resistance in a small package. Both devices offer exceptionally low total Gate Charge, Q_G, and Output Capacitance, C_{oss}, resulting in low switching losses and therefore providing very high efficiency.

The GaN Systems GS66506T, implemented in the SMPS, is a top-side cooled 650V, 22.5A E-HEMT that is easy to drive from standard PFC and LLC Controllers, using the simple EZDrive® circuit illustrated below.

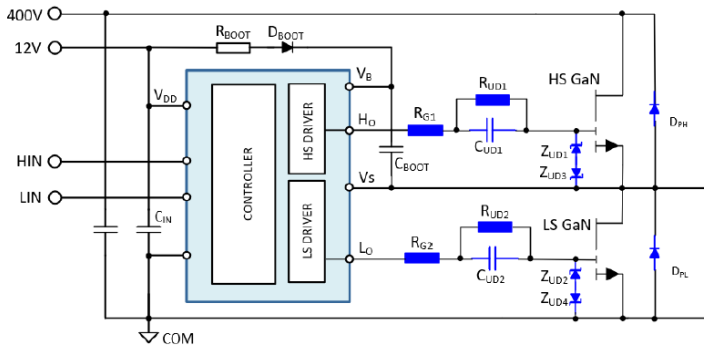

Figure 1.1 EZDrive® GaN E-HEMT Gate Drive Circuit

The GaN Systems' EZDrive® circuit is a low-cost, easy way to implement a GaN E-HEMT Drive circuit. It is adaptable to any power level, any switching frequency and any LLC and/or PFC Controller. The EZDrive® circuit provides design control for the optimization of efficiency and EMI. The EZDriver® circuit allows the use of a standard MOSFET Controller with integrated Driver to drive GaN Systems' E-HEMT devices.

The GaN Systems GS61008P, implemented in the Class-D Amplifier, is a bottom-side cooled 100V, 90A E-HEMT that can be easily driven directly from a variety of GaN Drivers. The Driver used in this Class-D Amplifier design is the Texas Instruments LM5113 Half-Bridge GaN Driver.

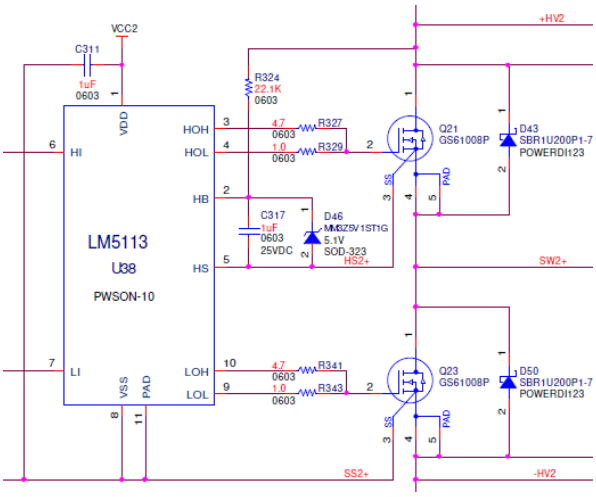

Figure 1.2 Class-D Amplifier GaN Gate Drive Circuitry

1.1 Solution Overview

This reference design provides the basis for a complete Stereo Class-D Audio Amplifier design achieving:

- 200W per Channel into 8 ohms
- 300W per Channel into 4 ohms
- 400W Continuous Output Power
- Power can be easily scaled by providing proper heatsinking and thermal management.
- Full load efficiency > (96%)
- Low THD+N (< 0.03%), can be further optimized in product development

This reference design provides the basis for a complete LLC Power Supply design, with Power Factor Correction (PFC), achieving:

- Universal AC line input voltage (85 V - 264 V)
- +/-32 V_{DC} Regulated Output Voltage

- 400W Continuous Output Power
- Power can be easily scaled by redesigning the magnetic components and providing proper heatsinking and thermal management.
- Full load Efficiency > (90%)

Solution Benefits

- Fan-less, Self-powered (from AC Line Input) design with no external DC supplies required
- Minimal external components due to high level of integration with D2Audio Controller/DSP
- High Efficiency across wide load range is achieved by using GaN E-HEMTs and advanced control techniques.
- Easily scaled to higher power with Magnetics and GaN Device selection

Renesas D2Audio DAE-3 Digital Control Processor

- 24-bit Fixed-Point DSP with 40K Words of Data RAM and 16K Words of Program RAM
- On-chip Hardware Accelerators, Asynchronous Sample Rate Converters, Fault Recovery and Protection Systems and Multiple Clock Domains provide for Graceful Performance, while supporting switching frequencies up to 768kHz
- Integrated high-performance PWM Engines support both ‘Direct Drive’ of Open-Loop architectures and high-performance PWM DACs to eliminate the need for external DACs to drive the Closed-Loop architectures.
- On-chip low-jitter PLL allows for extremely low noise performance, while eliminating the ’jitter’ from relatively poor external audio sources
- Variable frequency control minimizes EMI/RFI vs fixed frequency PWM method
- Adaptive and programmable control of Deadband timing to optimize Audio and EMI/EMC performance.
- Communication via SPI and I2C Ports for Control flexibility

GS61008P 100V E-HEMTs

- Easy gate drive requirements (0 V- 6 V)
- Transient tolerant gate drive (-20 V / +10 V)
- Very high switching frequency (> 10 MHz)
- Bidirectional power flow
- Zero reverse recovery loss
- GaN*PX*® packaging enables low inductance & thermal resistance in high power density applications.

GS66506T 650V E-HEMT Easy gate drive requirements (0 V- 6 V)

- Transient tolerant gate drive (-20 V / +10 V)
- Very high switching frequency (> 10 MHz)

- Bidirectional power flow
- Zero reverse recovery loss
- GaN*PX*® packaging enables low inductance & thermal resistance in high power density applications.

2) Design Example

The GaN Systems Evaluation Platform provides a complete GaN -based Audio System solution.

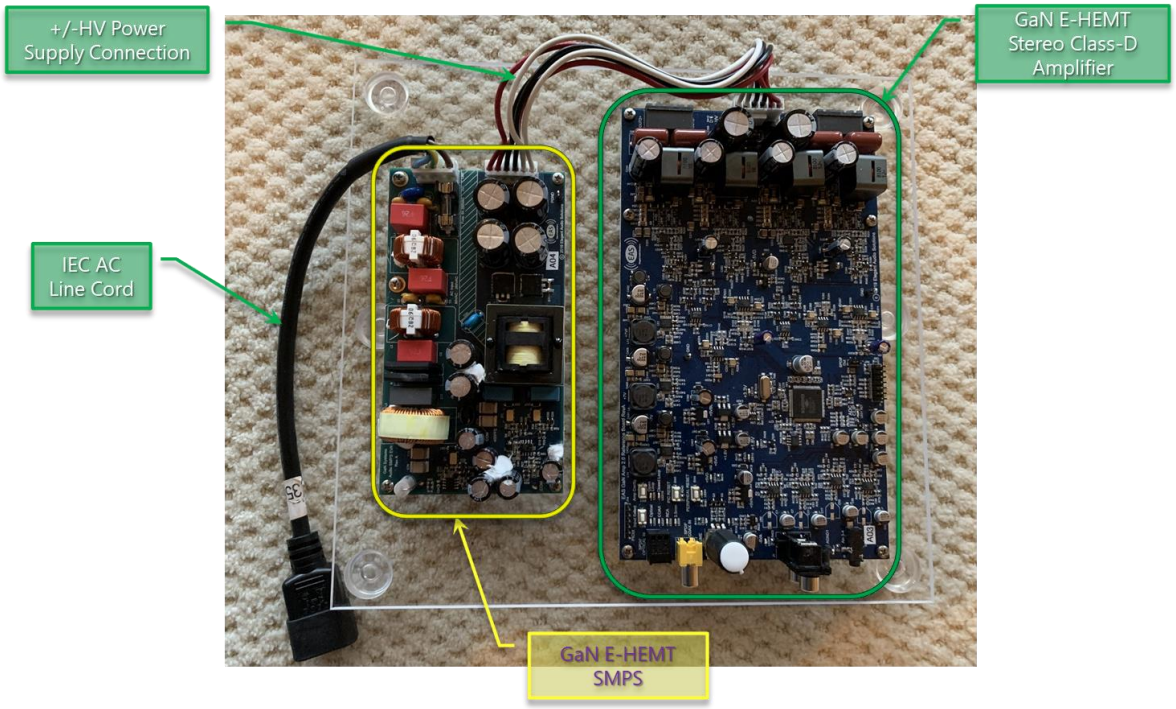

Figure 2.1 Complete GaN Systems Audio Amplifier Platform

The Evaluation Kit Bundle includes both a high-efficiency GaN-based LLC SMPS w/PFC, and a high-performance, high-efficiency GaN -based Class-D Stereo Amplifier. All discrete power devices are implemented as GaN Systems' E-HEMTs, allowing for the best possible trade-offs between efficiency, EMI/EMC performance and audio performance.

The Switched-Mode Power Supply (SMPS) is shown below, with all major components highlighted and described.

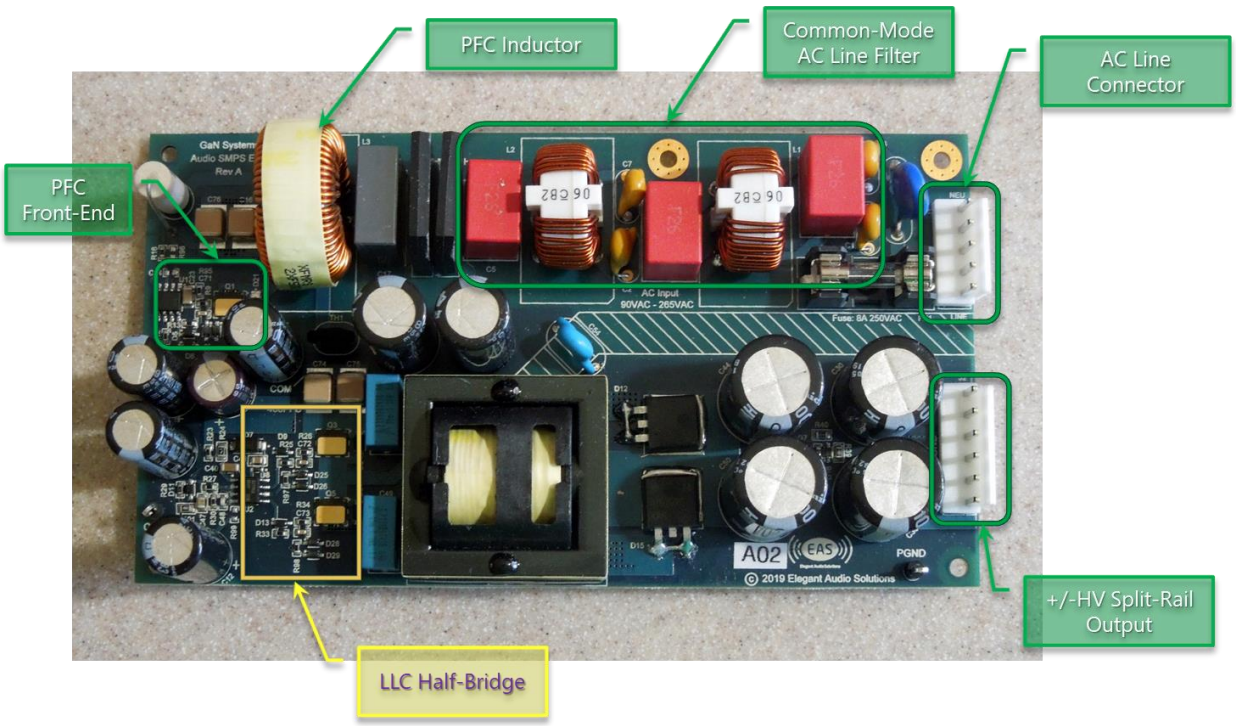

Figure 2.2 GaN-based LLC SMPS w/PFC

The SMPS includes all of the required components and subsystems for a complete and compliant High-Voltage Power Supply. The SMPS PCBA provides a “Universal Input” Front-End with PFC and a Half-Bridge LLC Back-End for highest efficiency in the smallest physical size.

1) AC Line Input Filter
   a) Dual Common-Mode Choke
   b) EMI/EMC Filter
   c) Fuse
2) Parallel Diode Bridge
3) Universal Voltage Power Factor Correction (PFC)
   a) NCP1654-133kHz PFC Controller
   b) Single GaN Systems GS66506T E-HEMT
   c) EZDrive® Circuit
   d) 5A, 500uH PFC Inductor
4) Regulated LLC Resonant DC/DC Converter
   a) IRS27952 LLC Controller
   b) GaN Systems GS66506T E-HEMT Half-Bridge
   c) LLC Transformer w/Integrated Inductor
   d) Full-Wave Output Bridge
   e) +/- 32VDC Split-Rail Output

The Stereo Class-D Amplifier is configured as a Dual Bridge-Tied-Load Output Topology to allow for the highest possible Power Output with the lowest possible Voltage Rails, and also to allow for a Ground-Referenced Output (no DC Level on + or – Outputs).

The Stereo Class-D Amplifier provides a variety of the standard Audio Source Inputs, which are selectable with an on-board MCU:

1) Coaxial Digital (S/PDIF)
2) Optical Digital (TOSLINK – S/PDIF)
3) Stereo RCA Phono Analog
4) 3.5mm Stereo Analog

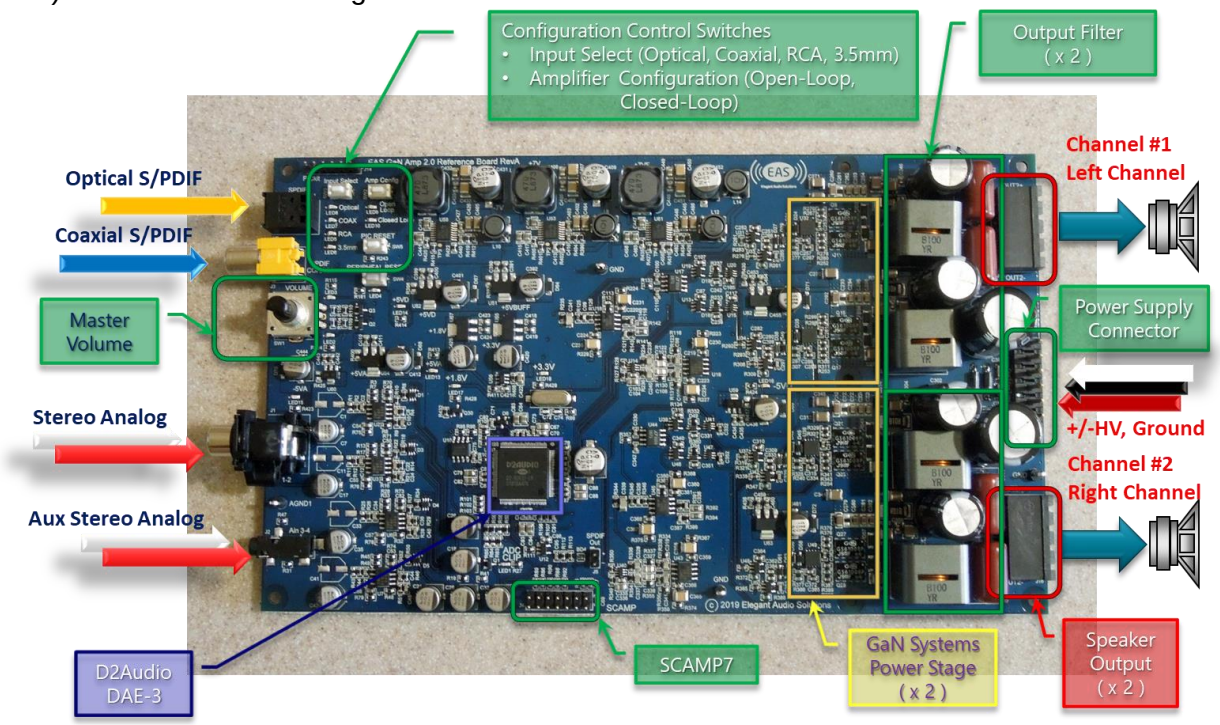

Figure 2.3 Stereo Class-D GaN E-HEMT Audio Amplifier Reference

The Amplifier PCBA provides a universal Evaluation Platform for Open-Loop and Closed-Loop GaN Systems Audio Amplifier configurations for measured and listening performance assessment and comparison.

3) Evaluation Board Test Bench Set-up and Configuration

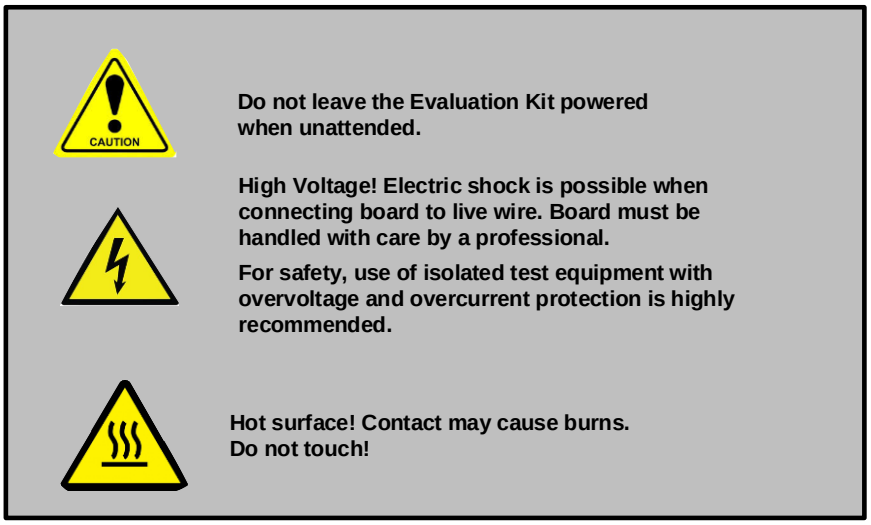

The following procedure should be used to Set-up and Configure the Basic GaN Systems Evaluation Board for assessment and comparison:

High-Performance Set-up

1) Connect the desired Audio Source Input to the corresponding Audio Input Connectors

   Coaxial Digital RCA Input (Default)
   Optical Digital TOSLINK Input
   Left/Right Analog RCA Phono Inputs
   3.5mm Stereo Auxiliary Analog Input

2) Connect the corresponding Audio Input Cable to the Audio Source (or Pre-Amp)
3) (If not already connected) Connect the GaN Systems SMPS to the GaN Systems Amplifier with the Supplied Cables (+/-32VDC supplied)
4) Connect the AC Line Adapter to a Standard AC Line Cord
5) Plug the AC Line Cord into a 'Switchable' AC Line Input or Multi-Outlet Strip
6) Connect the GaN Systems Amplifier Left and Right Loudspeaker Outputs to the Loudspeaker of Choice

NOTE: While both Loudspeaker Outputs are Ground-Referenced, NEITHER is connected to Ground. DO NOT CONNECT EITHER OF THESE LOUDSPEAKER OUTPUTS TO ANY SYSTEM OR TEST EQUIPMENT GROUND!!

7) Power On the +/-32VDC SMPS
8) Using the "Input Select" Switch, select the desired Audio Source Input
9) Rotate the Volume Control Knob 'Counter-clockwise' a couple of complete rotations
10) Using the "Open-Loop/Closed-Loop" Switch, select the desired Configuration

11) Play Audio Source
12) For Connecting to Audio Canvas III and Controlling the Audio Signal Flow and Hardware, please refer to Appendix A and Appendix B

CRITICAL NOTE: When using Audio Canvas III, DO NOT CHANGE any of the Audio Signal Flow, as it will result in a corresponding change in the Register Set API which is used by the on-board MCU. This could potentially render any or all of the on-board controls unusable, or as a minimum – with unexpected results. The same is true of any Hardware Settings the involve the addition of functionality. This could also perturb the Register Set API and affect MCU control operation.

However, any Parameter in the Audio Signal Flow, and also any Parameter in the Hardware Settings can be changed without fear of altering the Register Set API. One way to determine if the Register Set API has been altered is the view the Register Set 'plug-in' and check to see if any of the latter Parameter Locations are being moved or shifted from the 'default' locations.

4) Evaluation Board Test and Validation

The initial Evaluation Boards were tested and validated using industry-standard measurements, with recognized techniques and equipment. The Test Bench was set up with the following equipment for bring-up, test and validation:

Audio Precision AP2700 System Two Cascade w/AES-17 Filter
Audio Precision AUX0025 Passive Output Filter

The standard set of industry performance and validation tests were run using this Test Bench.

Performance Specification Testing
- Power Output (200W into 8 ohms)
- Power Output (400W into 4 ohms)

Performance Characterization Testing
- THD+N vs. Power/Level
- THD+N vs. Frequency
- Frequency Response (8-ohm, 4-ohm)
  - Limited by Audio Precision AES-17 Brick-Wall Filter
- Noise Floor (SNR)

5) Base Test Results and Characterization

Following are the results of both the initial Characterization that was performed on the Class-D Amplifier platforms. Unless otherwise noted, the Characterization was performed under the Power Supply conditions that allow for the specified Target Market specification of 200W/8-ohms. This requirement resulted in Power Supply Voltage rails of +/-32VDC. This selected Power Supply definition provides up to 200W of clean power into 8 ohms, (as captured in Figure 5.1 below).

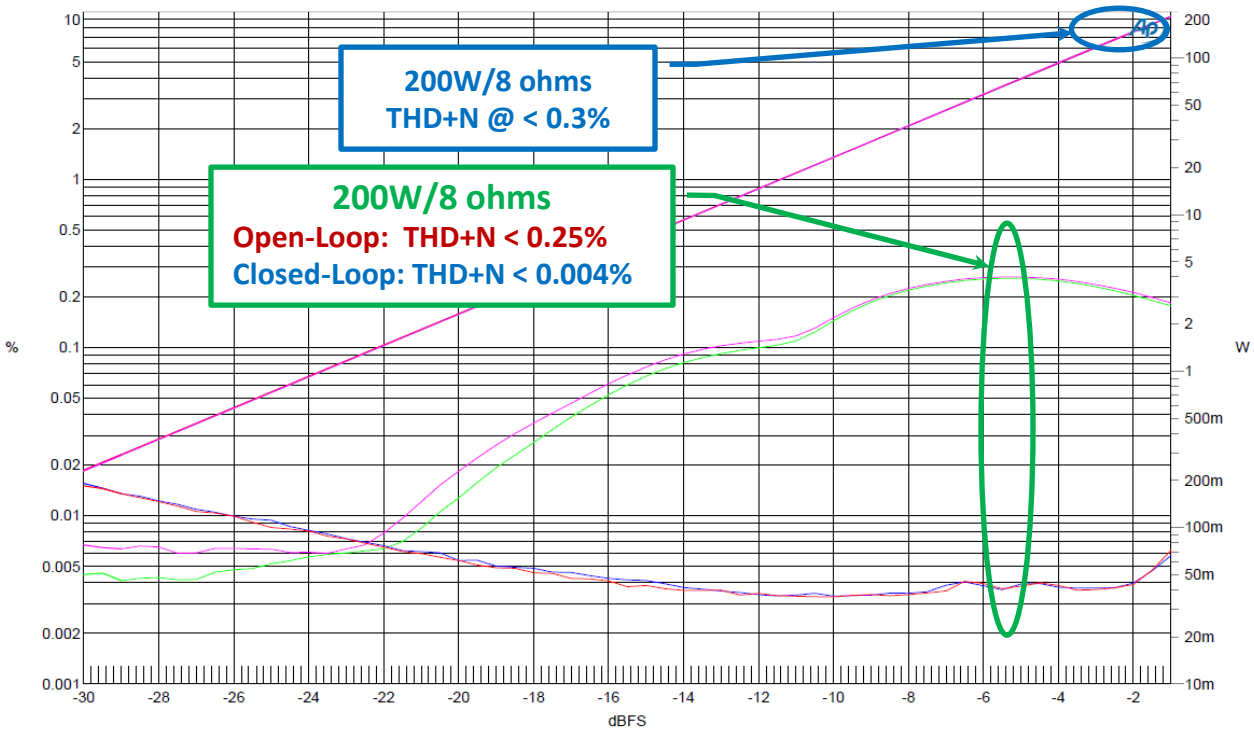

Sweep	Trace	Color	Line Style	Thick	Data	Axis	Comment
1	1	Magenta	Solid	1	Anlr.THD+N Ratio	Left	Ch1, Open Loop
1	2	Magenta	Solid	1	Anlr.Level A	Right	
2	1	Green	Solid	1	Anlr.THD+N Ratio	Left	Ch2 Open Loop
2	2	Green	Solid	1	Anlr.Level A	Right	
3	1	Blue	Solid	1	Anlr.THD+N Ratio	Left	Ch1, Closed Loop
3	2	Blue	Solid	1	Anlr.Level A	Right	
4	1	Red	Solid	1	Anlr.THD+N Ratio	Left	Ch2 Closed Loop
4	2	Red	Solid	1	Anlr.Level A	Right	

02 - THD vs Level @ 1kHz - SPDIF.at27

Figure 5.1: THD+N vs. Power into 8 Ohms @ +/-32VDC

From the THD+N vs. Level (Power) plot, it can be readily determined that the low signal-level THD performance for the Open-Loop Amplifier exceeds that of the Closed-Loop approach. This is mainly due to the increase Noise contribution of the Feedback and

can easily be understood by comparing this snapshot to the Noise Floor performance illustrated below in Figure 5.3.

As the audio signal level is increased, and hence the output power increased, the benefit of the Closed-Loop architecture is evident. However, the THD+N of the Open-Loop architecture compares very favorably, mainly due to the excellent switch characteristics of the GaN EE-HEMT in the Output Stage. By using an Open-Loop architecture with the ability to tightly control the Dead-band timing, near Closed-Loop THD performance can be achieved.

This is readily perceived in the THD+N vs. Frequency plots below, as well. The increase in THD+N with the Open-Loop architecture, and at the lower frequencies in mainly due to the lack of Power Supply rejection, and the contribution to the system-level performance by the SMPS.

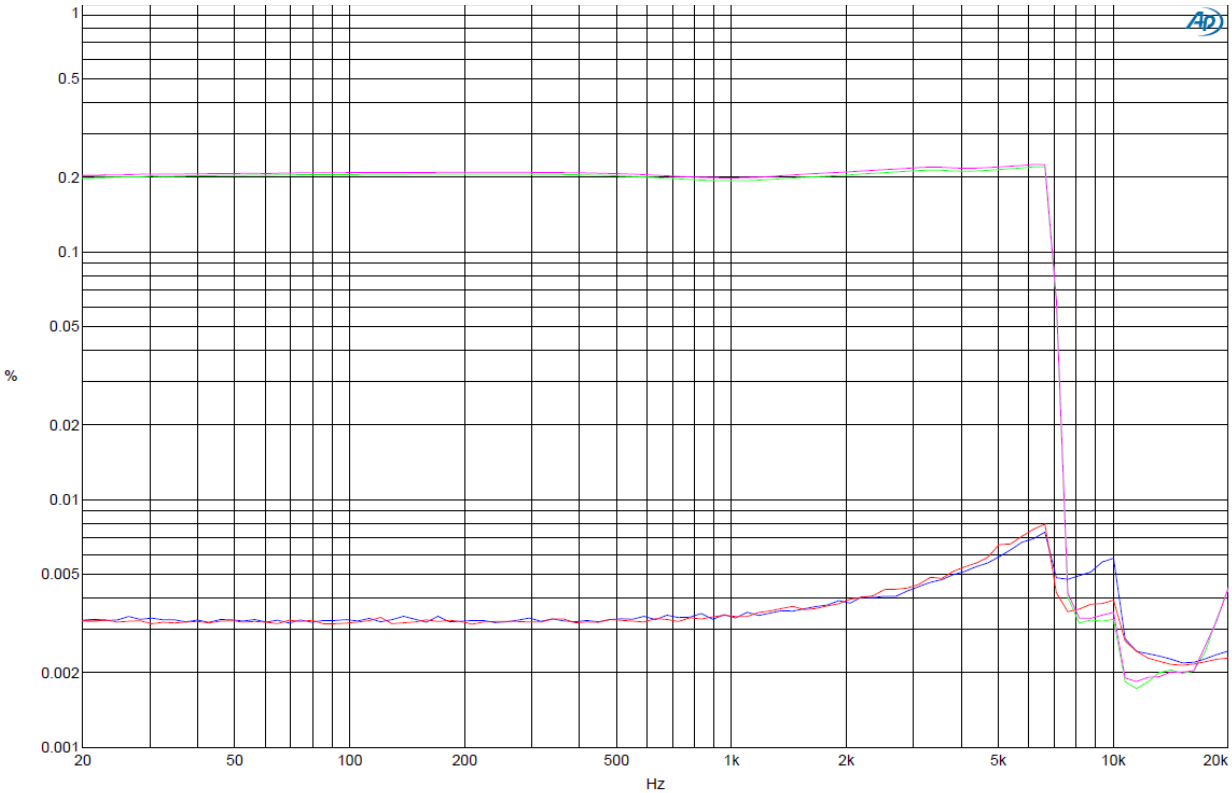

Sweep	Trace	Color	Line Style	Thick	Data	Axis	Comment
1	1	Magenta	Solid	1	Anlr.THD+N Ratio	Left	Ch1, -9dBFS In, 29.26W Out 8-Ohms Open Loop
2	1	Green	Solid	1	Anlr.THD+N Ratio	Left	Ch2, -9dBFS In, 29.25W Out 8-Ohms Open Loop
3	1	Blue	Solid	1	Anlr.THD+N Ratio	Left	Ch1, -9dBFS In, 29.21W Out 8-Ohms Closed Loop
4	1	Red	Solid	1	Anlr.THD+N Ratio	Left	Ch2, -9dBFS In, 29.31W Out 8-Ohms Closed Loop

04 - THD vs Freq - SPDIF.at27

Figure 5.2: THD+N vs. Frequency

However, as with the THD+N vs. Level measurements, the Open-Loop architecture very quickly approaches the performance of the Closed-Loop architecture in the upper-mid-range.

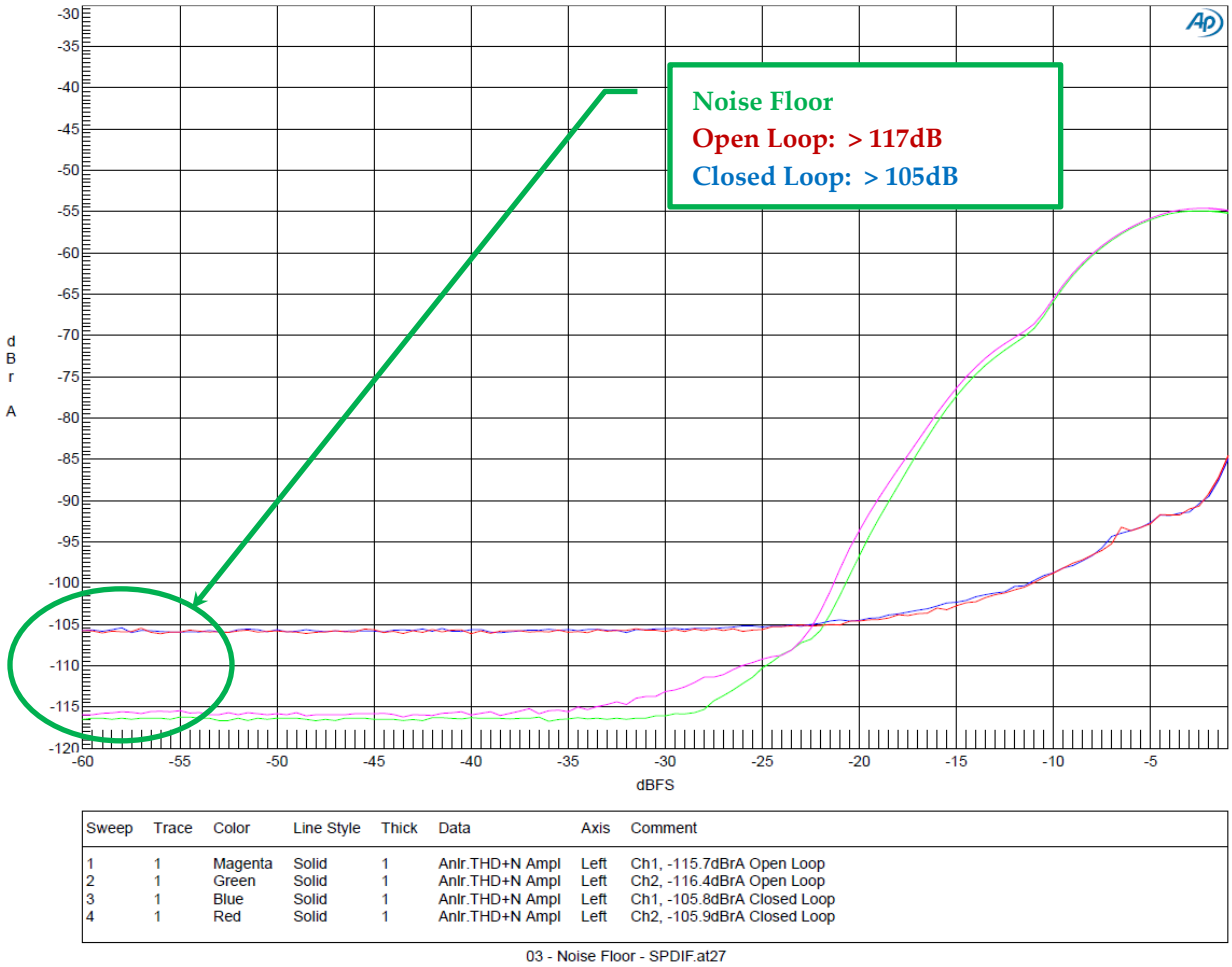

Figure 5.3: Noise Floor

As mentioned above, this huge (12dB) difference in Noise Floor ultimately affects the low-signal-level performance of all audio measurements.

5) Conclusion

In summary, this Reference design provides the basis for customers to quickly develop a complete Class-D Amplifier design and companion Power Supply design including heatsinking, thermal management and appropriate operating points.

6) Appendix

This Section captures the methodology and procedures for connecting to a DAE-3 Controller-based platform, launching Audio Canvas III, Version 3.2.6. It also includes a capture of the Schematics of both the GaN-based Class-D Amplifier and the GaN-based SMPS.

6.1 Audio Canvas III Installation

It is critical that Version 3.2.6 of the Audio Canvas III Control Surface GUI be installed and used for this described procedure.

For “first time” installation of Audio Canvas III, refer to Appendix A of this document.

For “first time” attachment to D2Audio Hardware, refer to Appendix B of this document.

Appendix A

First-Time Installation of Audio Canvas III

To install Audio Canvas III for the first time on a PC/Laptop, please follow this procedure.

1. Uninstall any previous or earlier versions of Audio Canvas
2. Unzip the Audio Canvas Version 3.2.6 File to a convenient location on your PC/Laptop
3. From the Audio Canvas III Folder, locate the “Setup” program in the “InstallerDisk_Std” Folder as shown below in Figure A1. When installing under Windows 8 or Windows 10, right-click on the “Setup” program and select “Run as Administrator” as in Figure A2. If asked whether you wish to continue with the installation, simply select “Yes”.

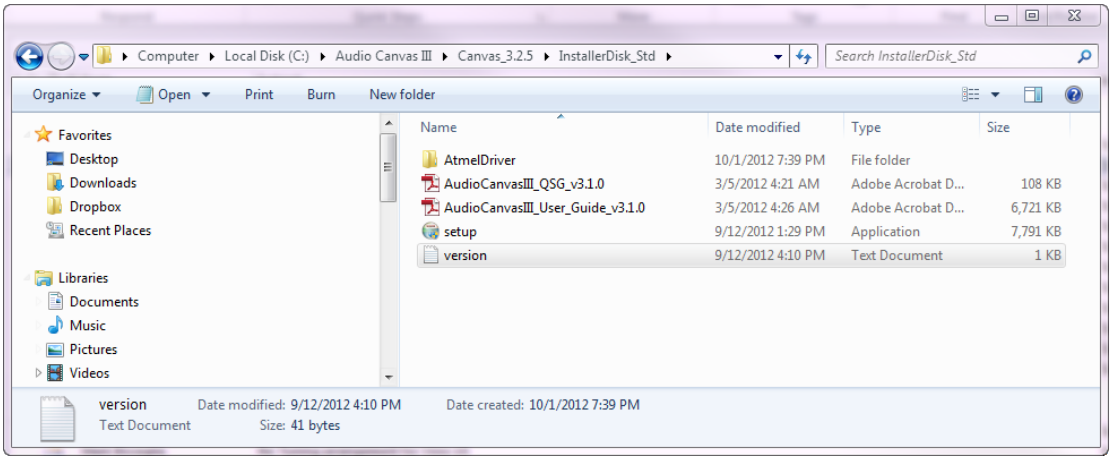

Figure A1: InstallerDisk_Std Folder Contents

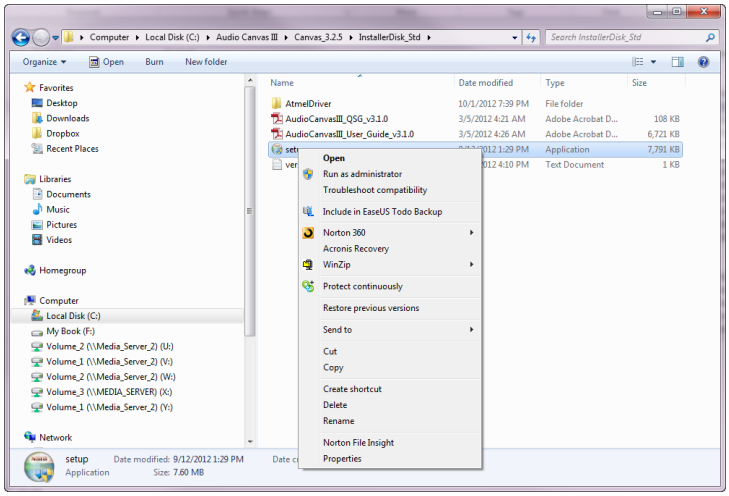

Figure A2: Right-Click and Select “Run as Administrator”

4. The “Welcome” Screen will appear

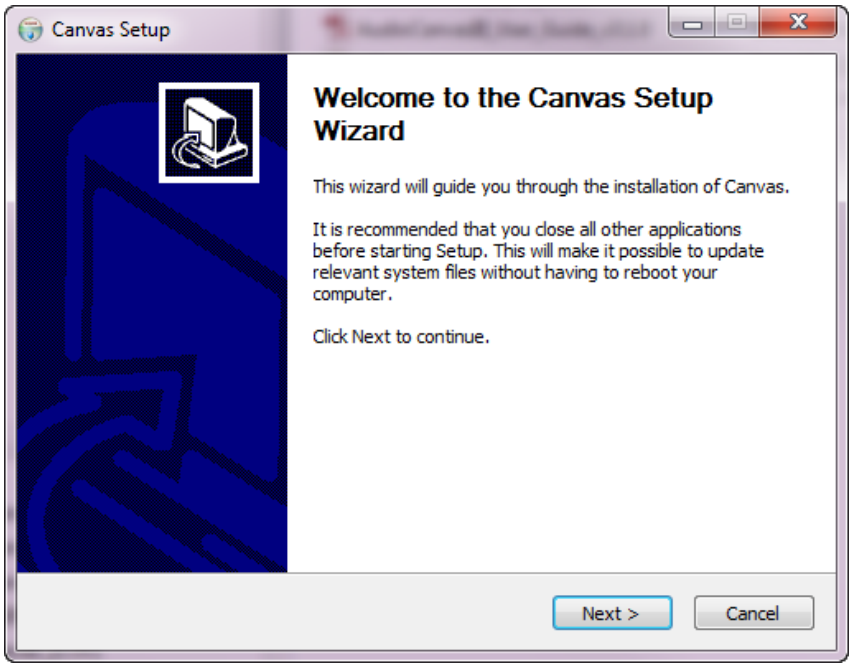

Figure A3: Audio Canvas III Installation “Welcome” Screen

5. Select “Next”
6. The License Agreement will be displayed

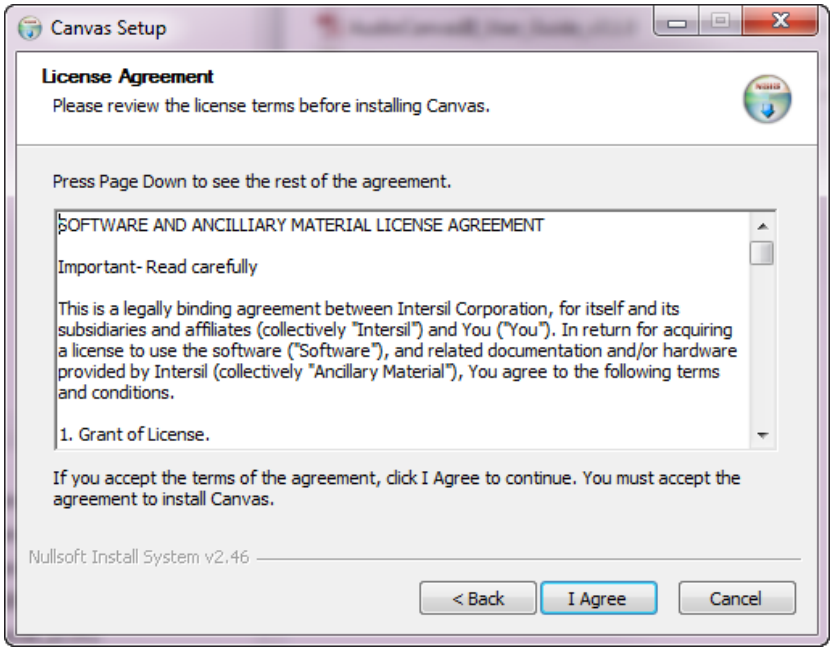

Figure A4: Audio Canvas III License Agreement

7. Select “I Agree”
8. Select the Components for Installation and Click “Install”

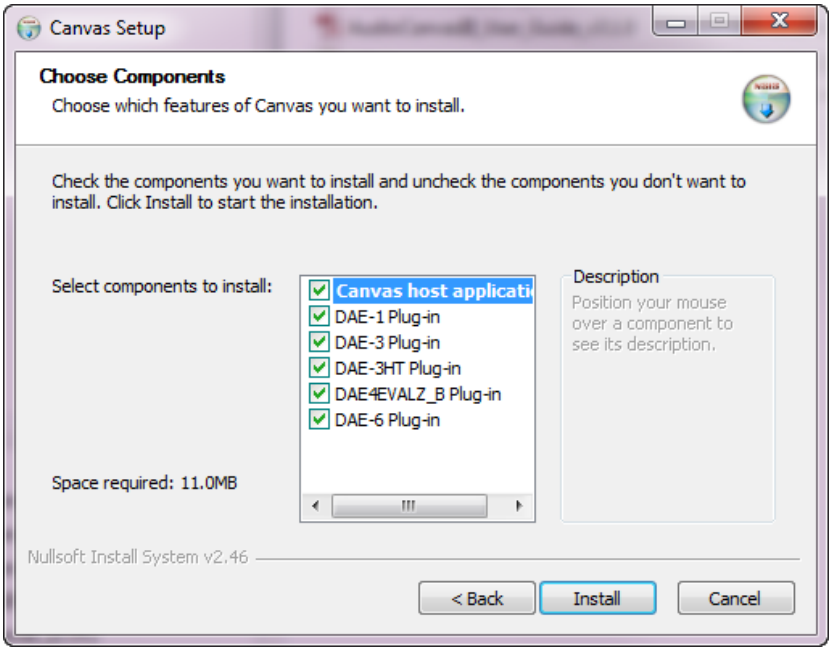

Figure A5: Audio Canvas III Component “Plug-in” Selection

9. This completes the Audio Canvas III Setup

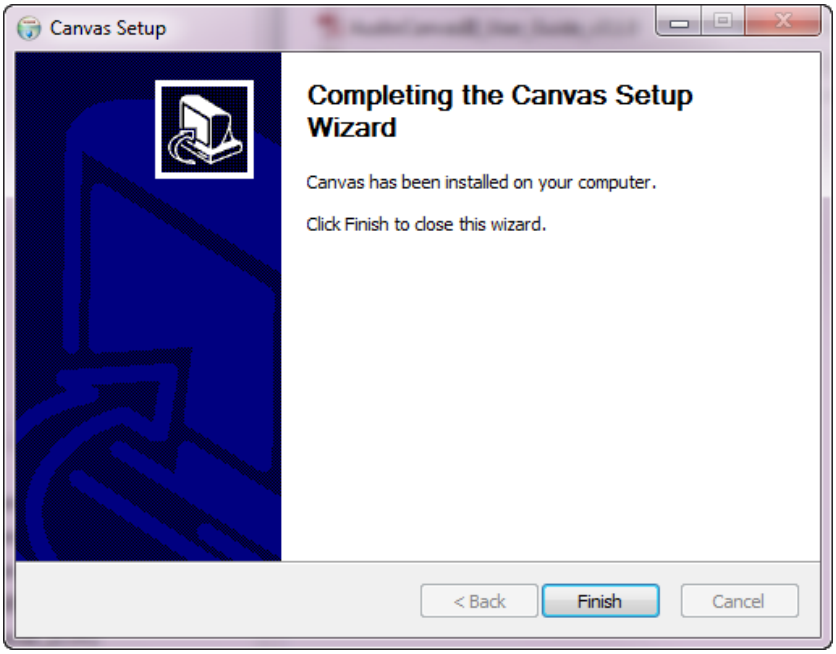

Figure A6: Successful Installation Screen

10. Select “Finish” to complete the Installation

Appendix B

First Time Attachment to Hardware (or SCAMP7 Dongle)

After installing the Audio Canvas III Control Surface GUI programs and enhancements, the SCAMP-7EVALZ or SCAMP-8EVALZ USB programming/tuning "Dongle" can be attached to the PC USB Port using the following procedure. This same procedure is used when connecting directly to any D2Audio 'Target Hardware' (Customer Board):

1. With the 'Target Hardware' turned "Off", connect the SCAMP-7/8 Dongle Cable to the 'Target Hardware'
2. Turn "On" the 'Target Hardware'
3. Connect the SCAMP7/8 Dongle to the USB Port on the PC/Laptop using the standard USB mini-plug connector
4. The procedure is similar for both Windows 8 and Windows 10

NOTE: For installations on Windows 8.1 and Windows 10, please be sure that you are installing the supplied "Signed Driver"

5. Observe the LEDs on the SCAMP7/8 Dongle board. Assuming the 'Target Hardware' is running, the "red" RESET LED should be off, the "green" USB ACTIVE LED should be blinking
6. After attaching the SCAMP7/8 to the USB Port of the PC/Laptop, the SCAMP7/8 Dongle will appear as an "Unknown device" in the Device Manager of the Windows Control Panel

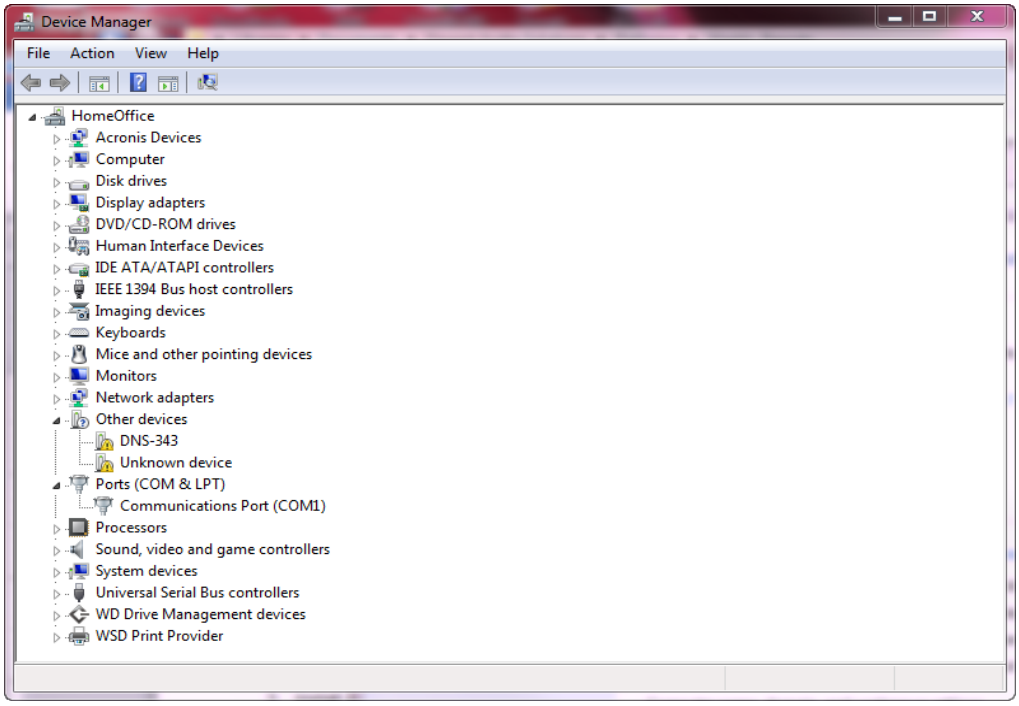

Figure B1: Windows Control Panel Device Manager

7. Right Click on the “Unknown device” and Select “Update Driver” from the “Properties” page as illustrated in Figure B2 below

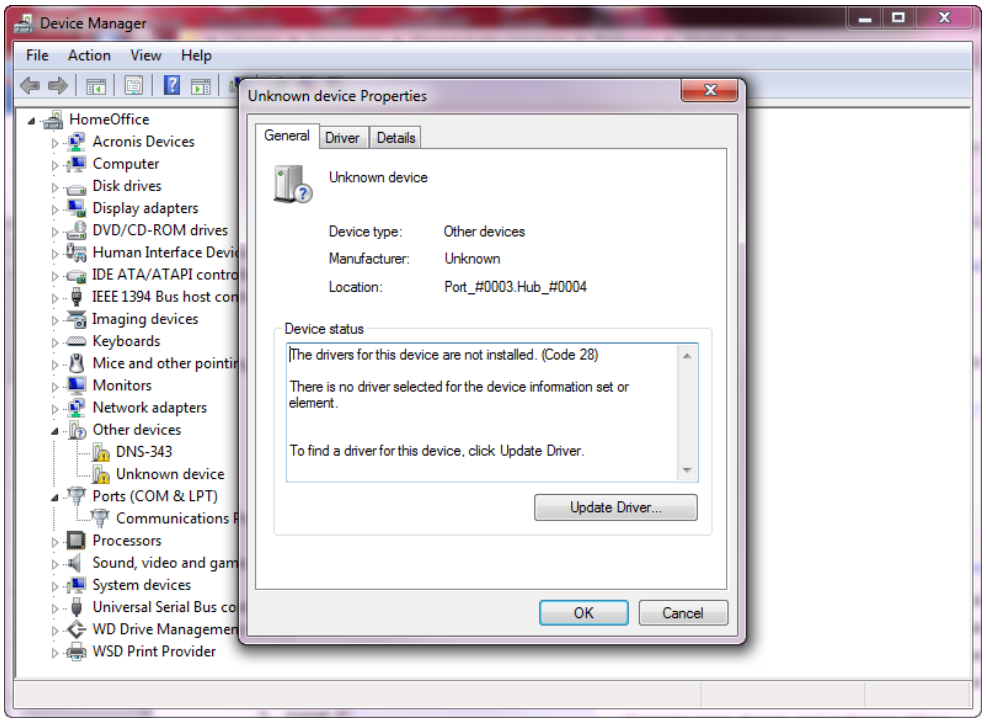

Figure B2: “Unknown device” Properties Page

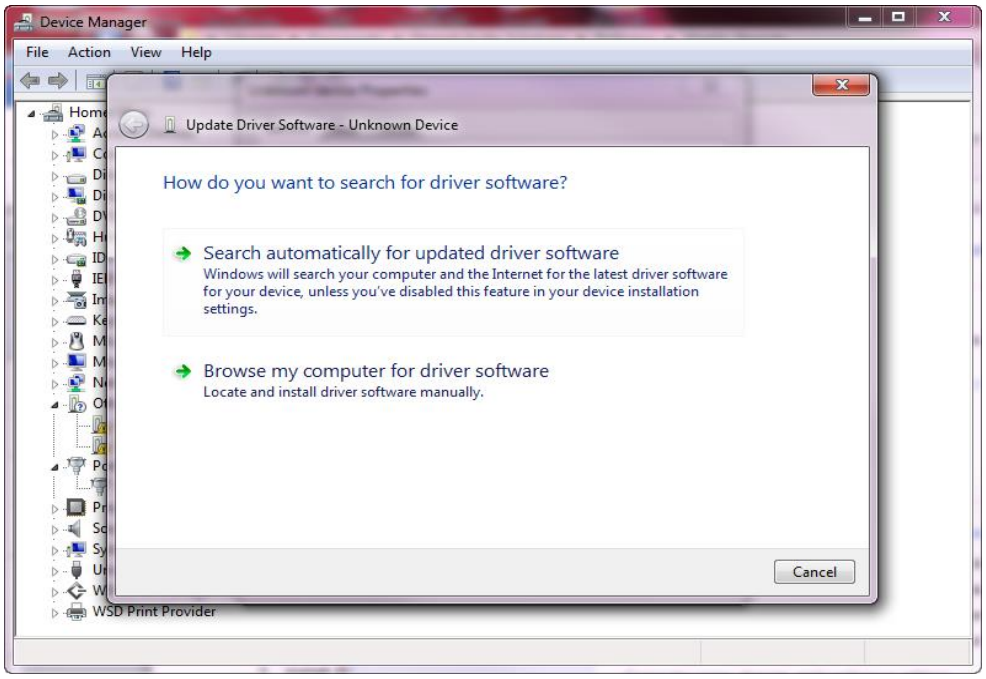

Figure B3: Update Driver Software Selection Menu

8. Select “Browse my computer for Driver software”

9. The correct Driver for the SCAMP7/8 Dongle is found in the “Signed Driver” Folder of the InstallerDisk_Std, and is named “ISL_D2_USB.inf” as shown in Figure B4

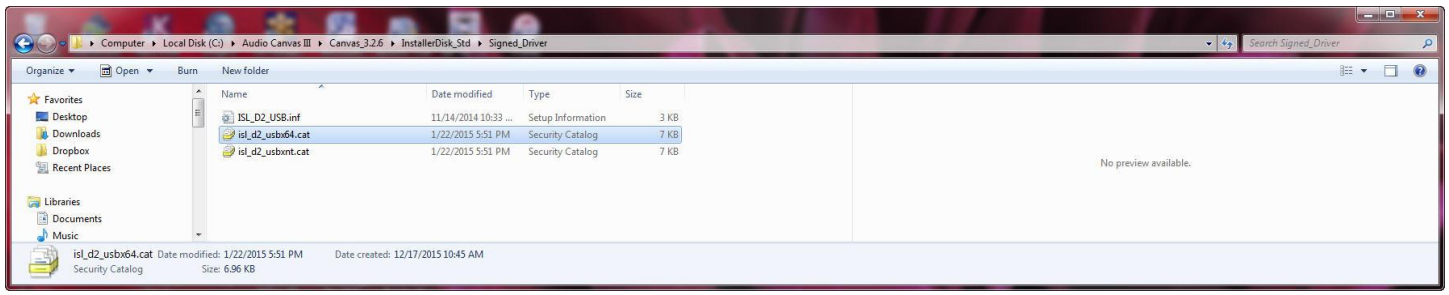

Figure B4: SCAMP7/8 (D2Audio Hardware) Driver

10. After selecting the “Browse” option, the following page will appear
11. Navigate to the Folder location of the Driver described in Figure B4

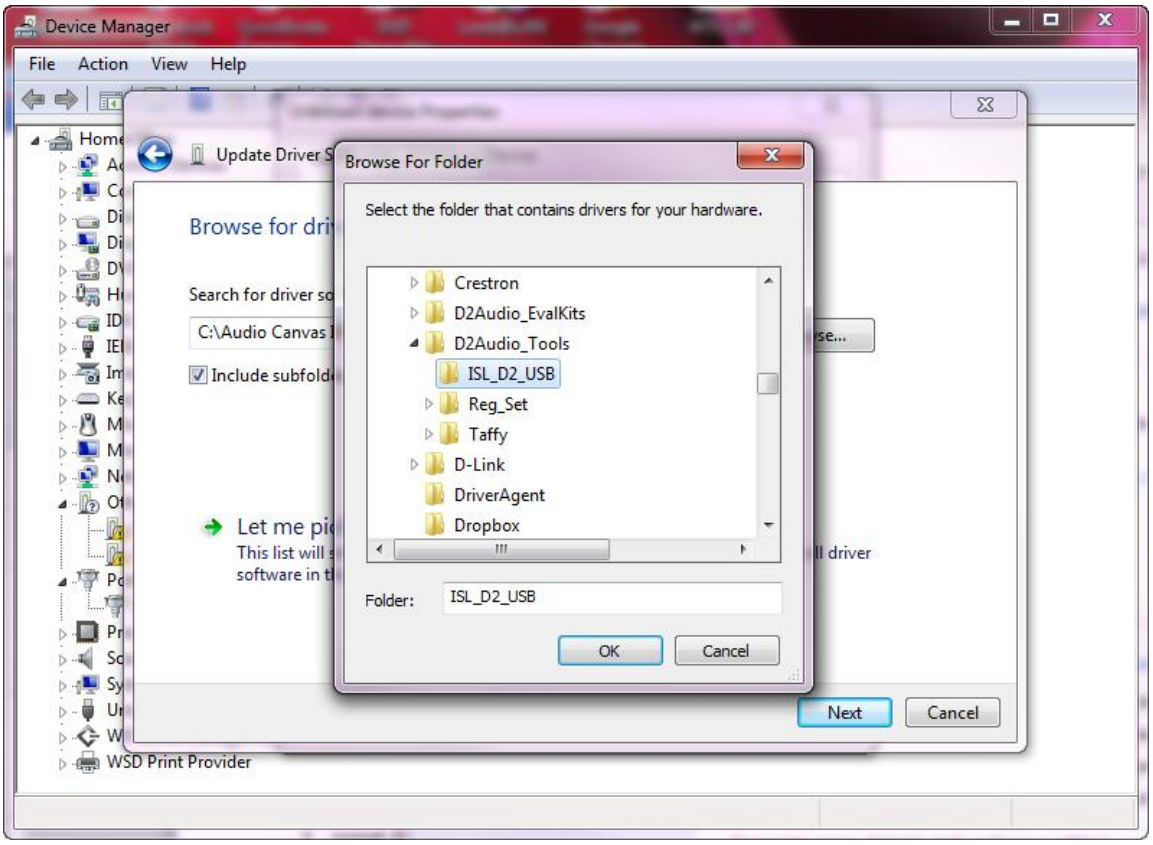

Figure B5: Browse for Driver Folder Menu

12. Select the Driver Folder location (NOTE: It might be a different Folder than the one shown in Figure B5)

13. Select “OK”
14. This location will be placed in the “Driver location” as shown in Figure B6

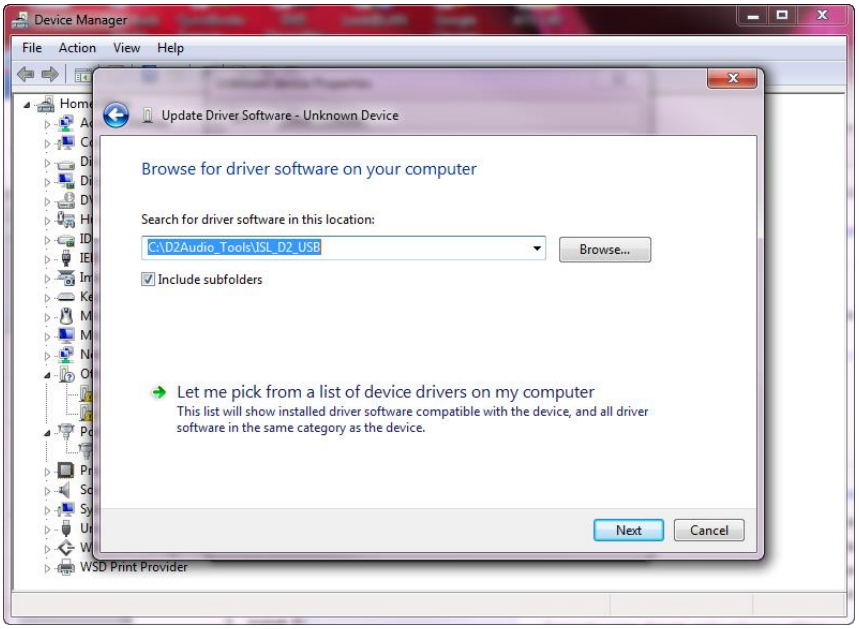

Figure B6: Driver Browse page

15. Select “Next”

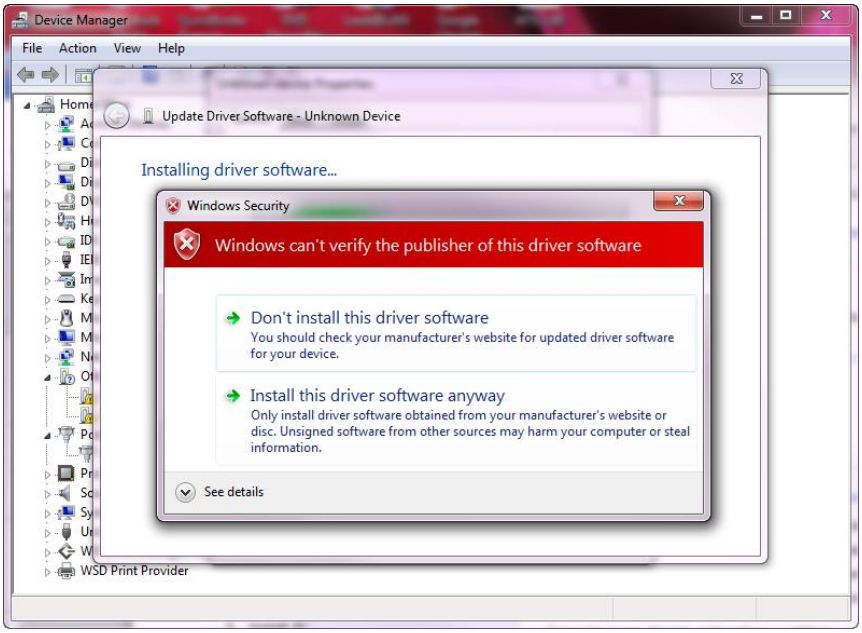

Figure B7: Windows Security Warning
16. Select “Install this driver software anyway”

17. The successful installation window should appear as shown below in Figure B8

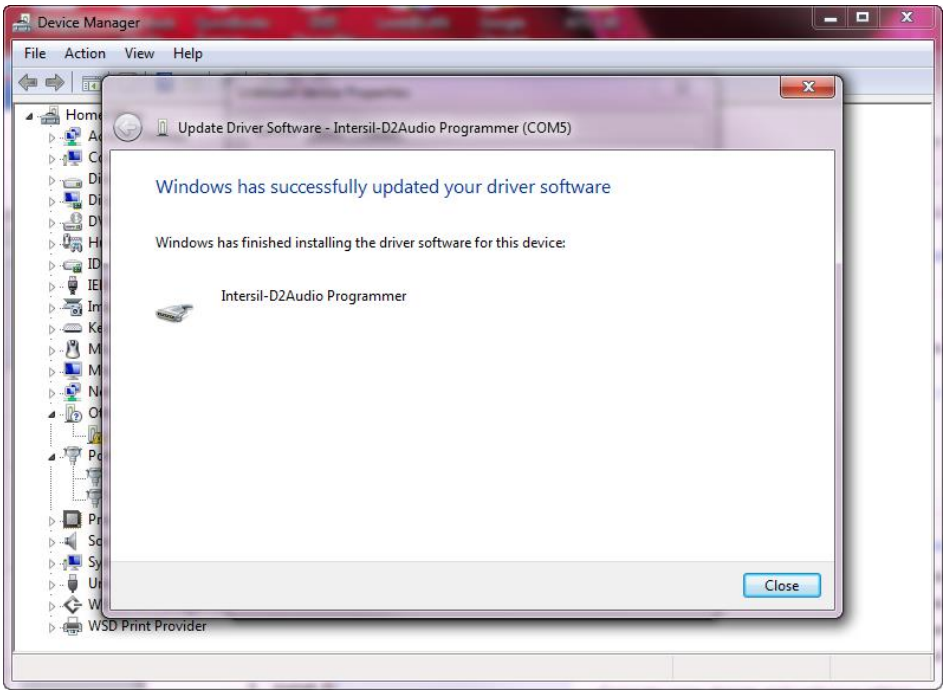

Figure B8: Successful Installation Window

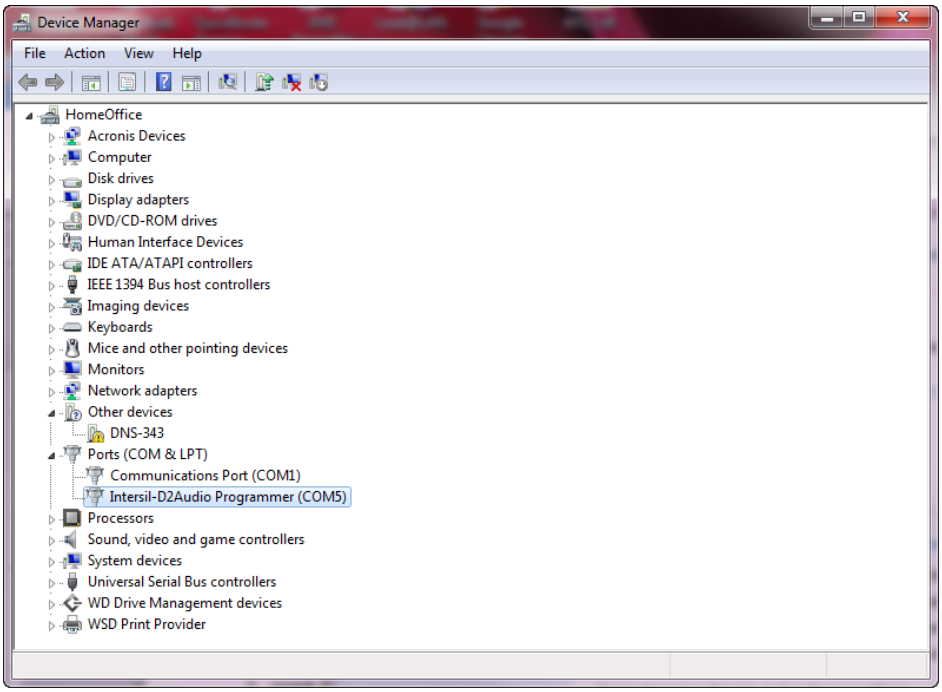

Figure B9: Correctly Instantiated COM Port for D2Audio Hardware Interface

Evaluation Board/kit Important Notice

GaN Systems Inc. (GaN Systems) provide the enclosed product(s) under the following **AS IS** conditions:

This evaluation board/kit being sold or provided by GaN Systems is intended for use for **ENGINEERING DEVELOPMENT, DEMONSTRATION, and OR EVALUATION PURPOSES ONLY** and is not considered by GaN Systems to be a finished end-product fit for general consumer use. As such, the goods being sold or provided are not intended to be complete in terms of required design-, marketing-, and/or manufacturing-related protective considerations, including but not limited to product safety and environmental measures typically found in end products that incorporate such semiconductor components or circuit boards. This evaluation board/kit does not fall within the scope of the European Union directives regarding electromagnetic compatibility, restricted substances (RoHS), recycling (WEEE), FCC, CE or UL, and therefore may not meet the technical requirements of these directives, or other related regulations.

If this evaluation board/kit does not meet the specifications indicated in the User's Guide, the board/kit may be returned within 30 days from the date of delivery for a full refund. THE FOREGOING WARRANTY IS THE EXCLUSIVE WARRANTY MADE BY THE SELLER TO BUYER AND IS IN LIEU OF ALL OTHER WARRANTIES, EXPRESSED, IMPLIED, OR STATUTORY, INCLUDING ANY WARRANTY OF MERCHANTABILITY OR FITNESS FOR ANY PARTICULAR PURPOSE. EXCEPT TO THE EXTENT OF THIS INDEMNITY, NEITHER PARTY SHALL BE LIABLE TO THE OTHER FOR ANY INDIRECT, SPECIAL, INCIDENTAL, OR CONSEQUENTIAL DAMAGES.

The user assumes all responsibility and liability for proper and safe handling of the goods. Further, the user indemnifies GaN Systems from all claims arising from the handling or use of the goods. Due to the open construction of the product, it is the user's responsibility to take any and all appropriate precautions with regard to electrostatic discharge.

No License is granted under any patent right or other intellectual property right of GaN Systems whatsoever. **GaN Systems assume liability for applications assistance, customer product design, software performance, or infringement of patents or any other intellectual property rights of any kind.**

GaN Systems currently service a variety of customers for products around the world, and therefore this transaction **is not exclusive**.

Please read the User's Guide and, specifically, the Warnings and Restrictions notice in the User's Guide prior to handling the product. Persons handling the product(s) must have electronics training and observe good engineering practice standards.

This notice contains important safety information about temperatures and voltages. For further safety concerns, please contact the GaN Systems' Engineering Team.

Canada:

GaN Systems Inc.
1145 Innovation Drive Suite 101
Ottawa, Ontario, Canada K2K 3G8
T +1 613-686-1996

In Europe:

GaN Systems Ltd., German Branch
Terminalstrasse Mitte 18,
85356 München, Germany
T +49 (0) 8165 9822 7260

In the United States:

GaN Systems Corp.
2723 South State Street, Suite 150,
Ann Arbor, MI. USA 48104
T +1 248-609-7643

www.gansystems.com